TRANSTRAND

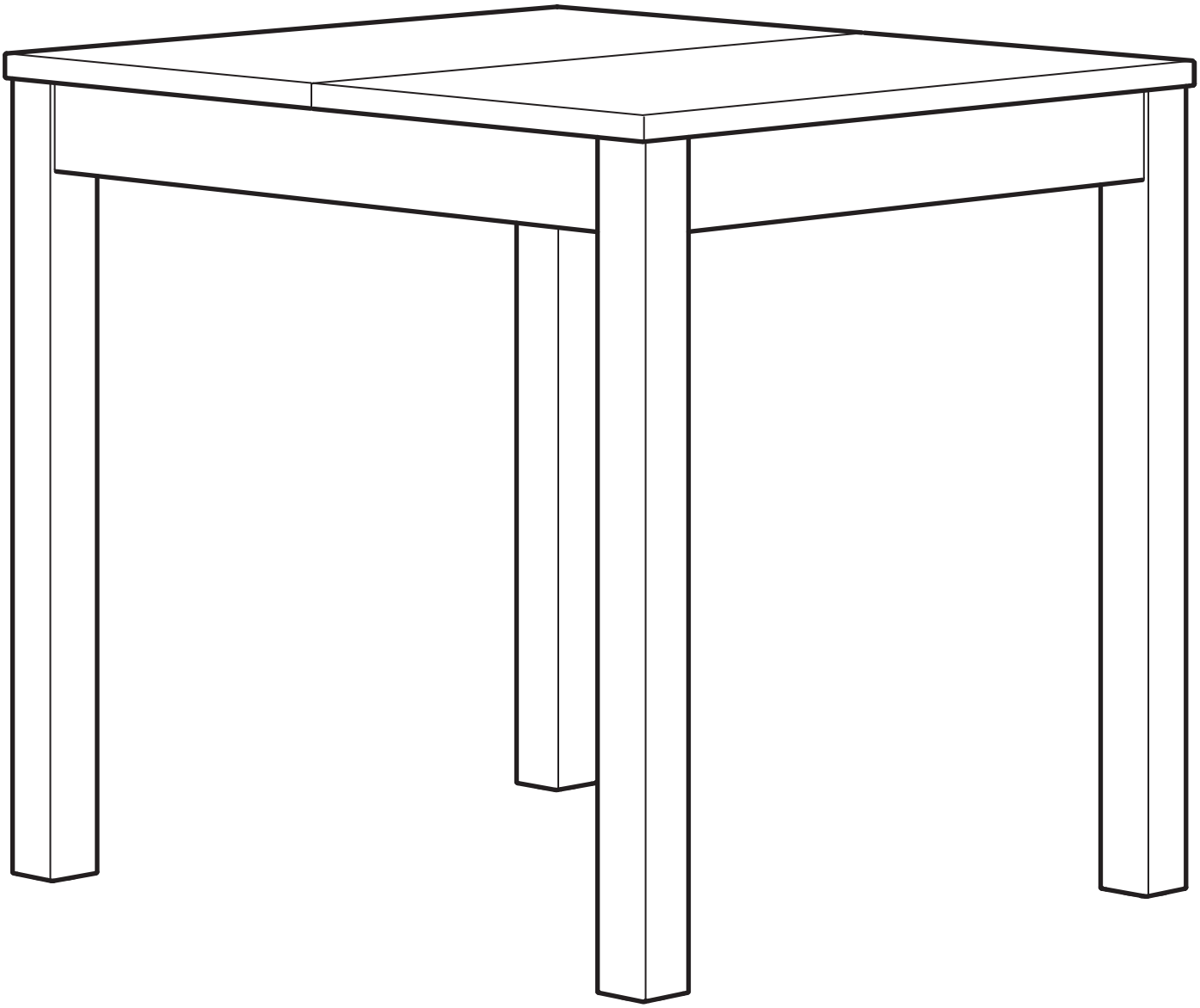

Design and Quality
IKEA of Sweden

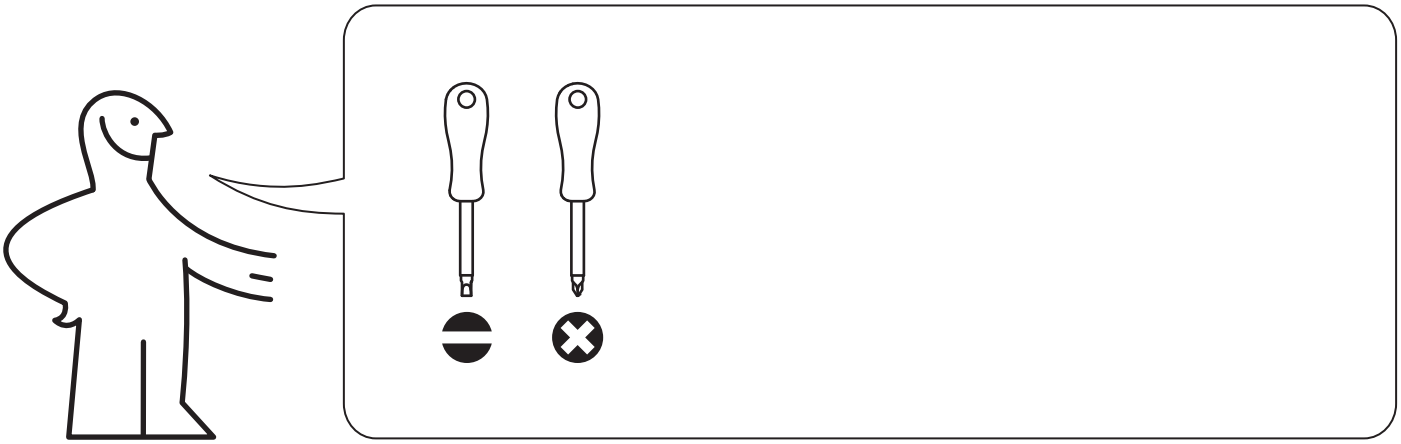

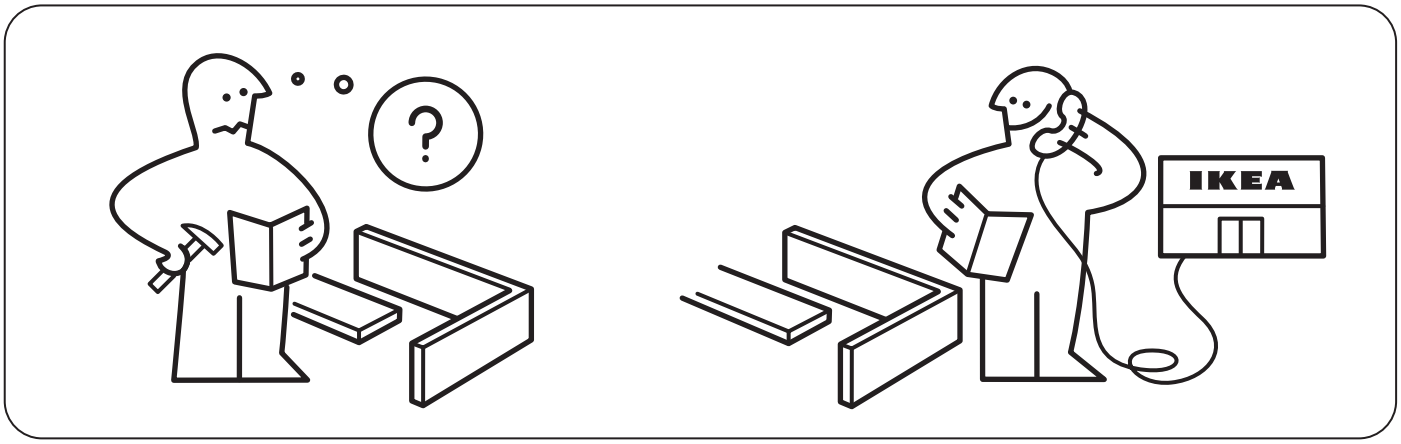

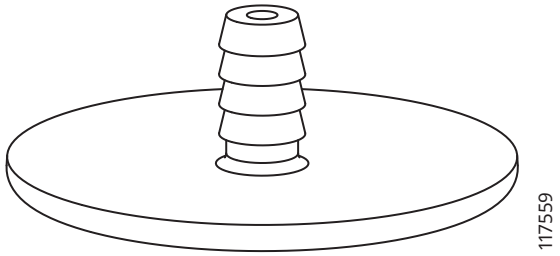

4x

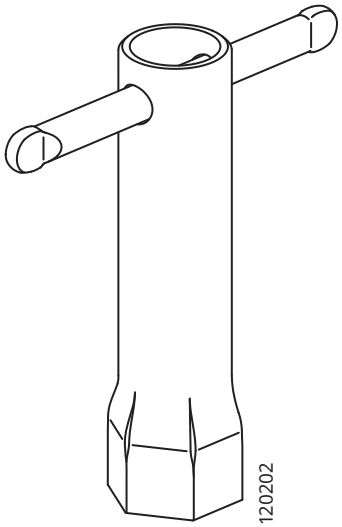

1x

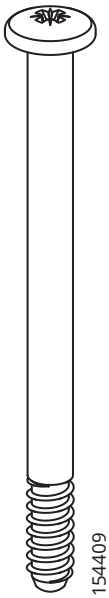

12x

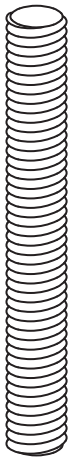

8x

4x

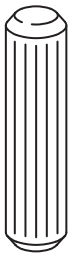

6x

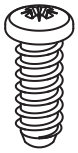

16x

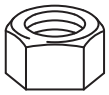

8x

8x

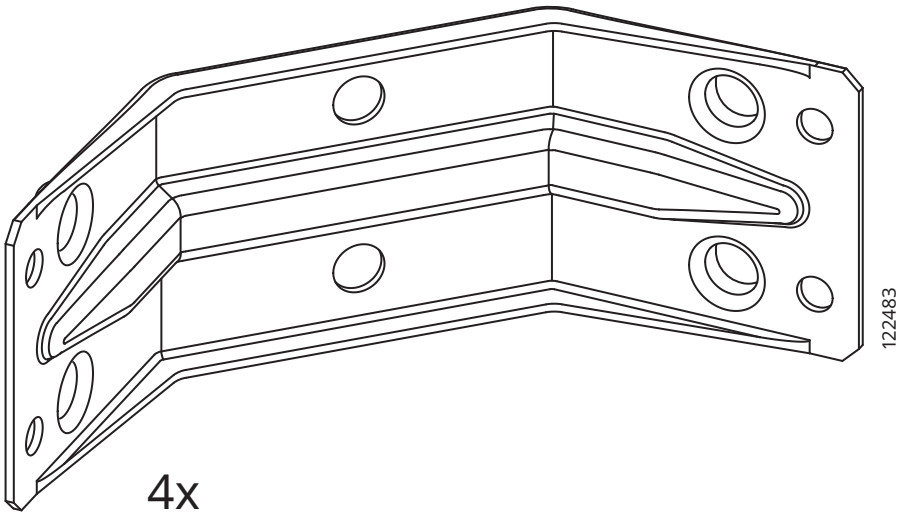
122483
4x

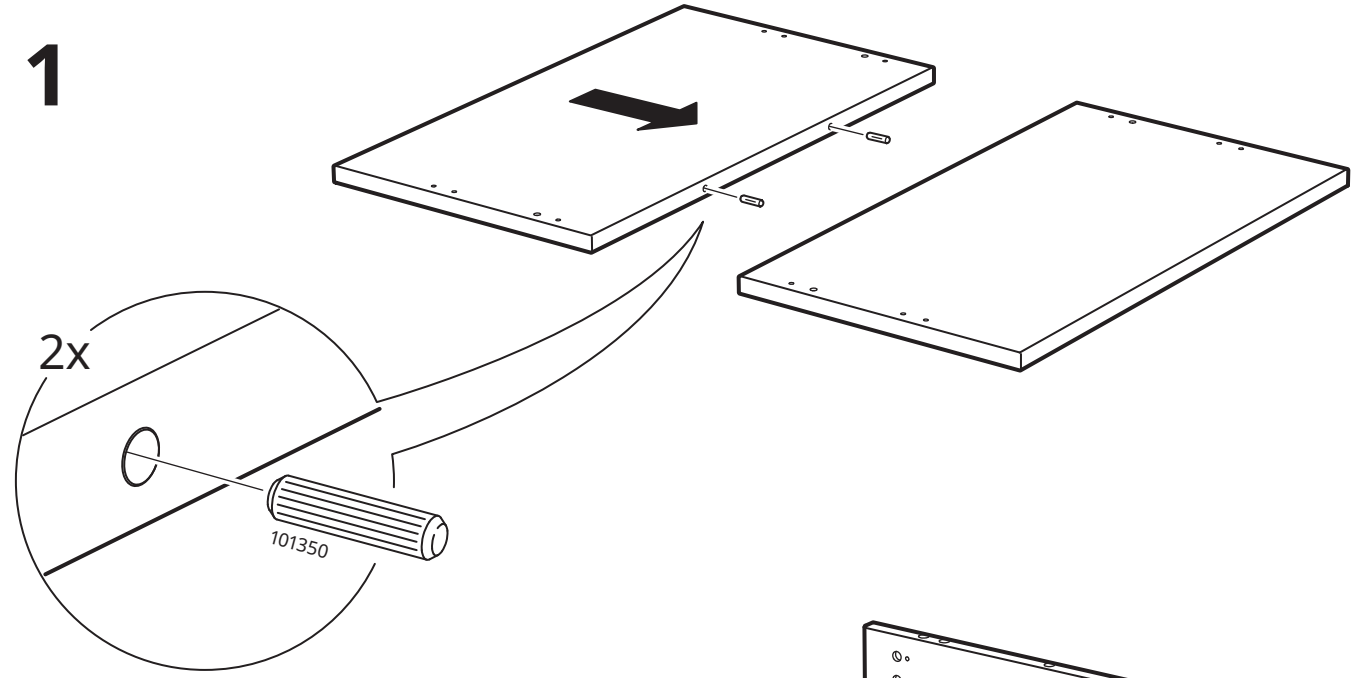
1
2x
101350

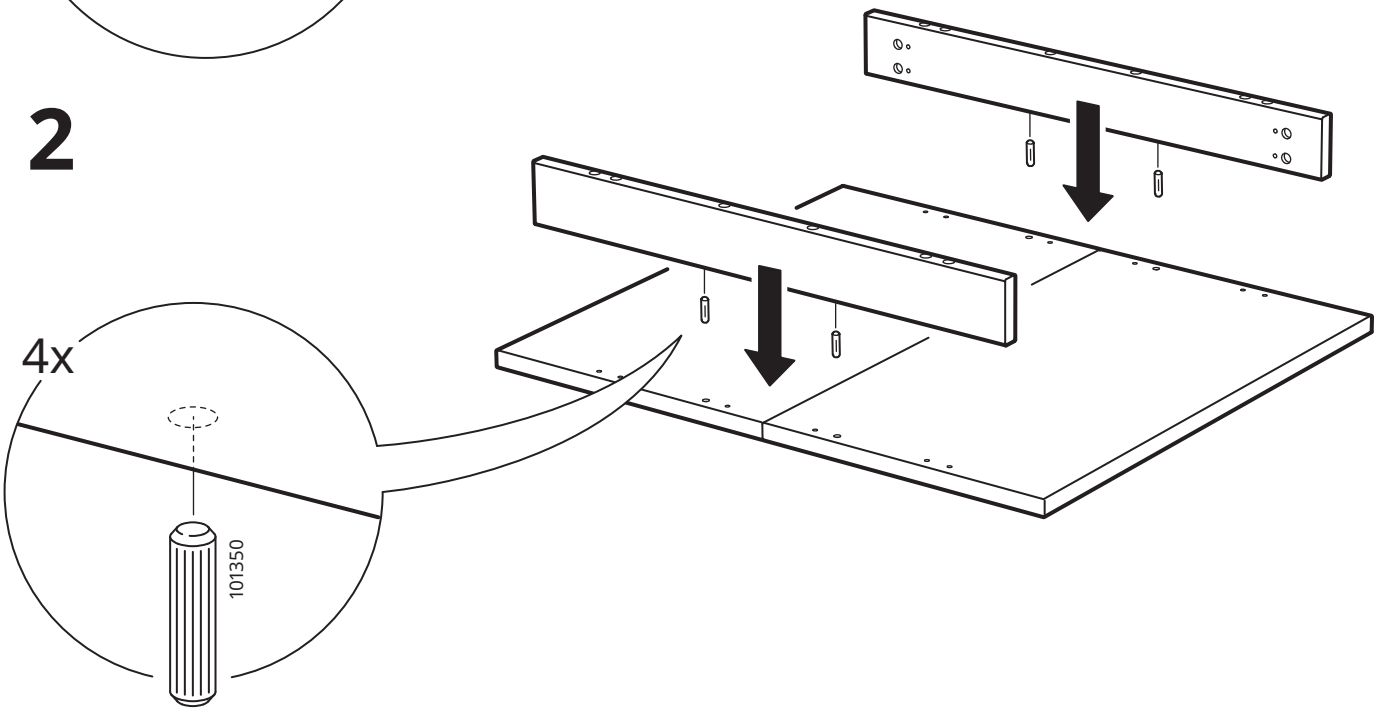
2
4x
101350

3

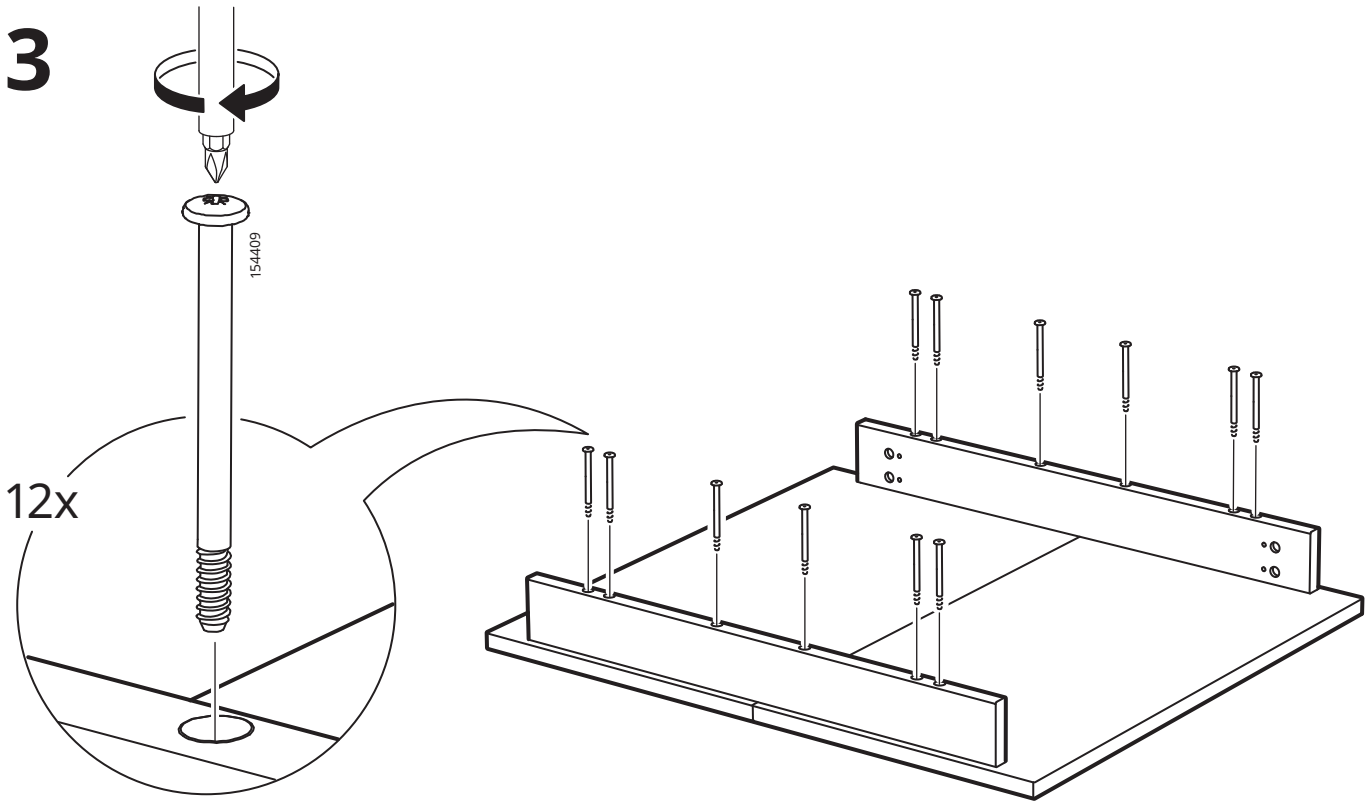

4

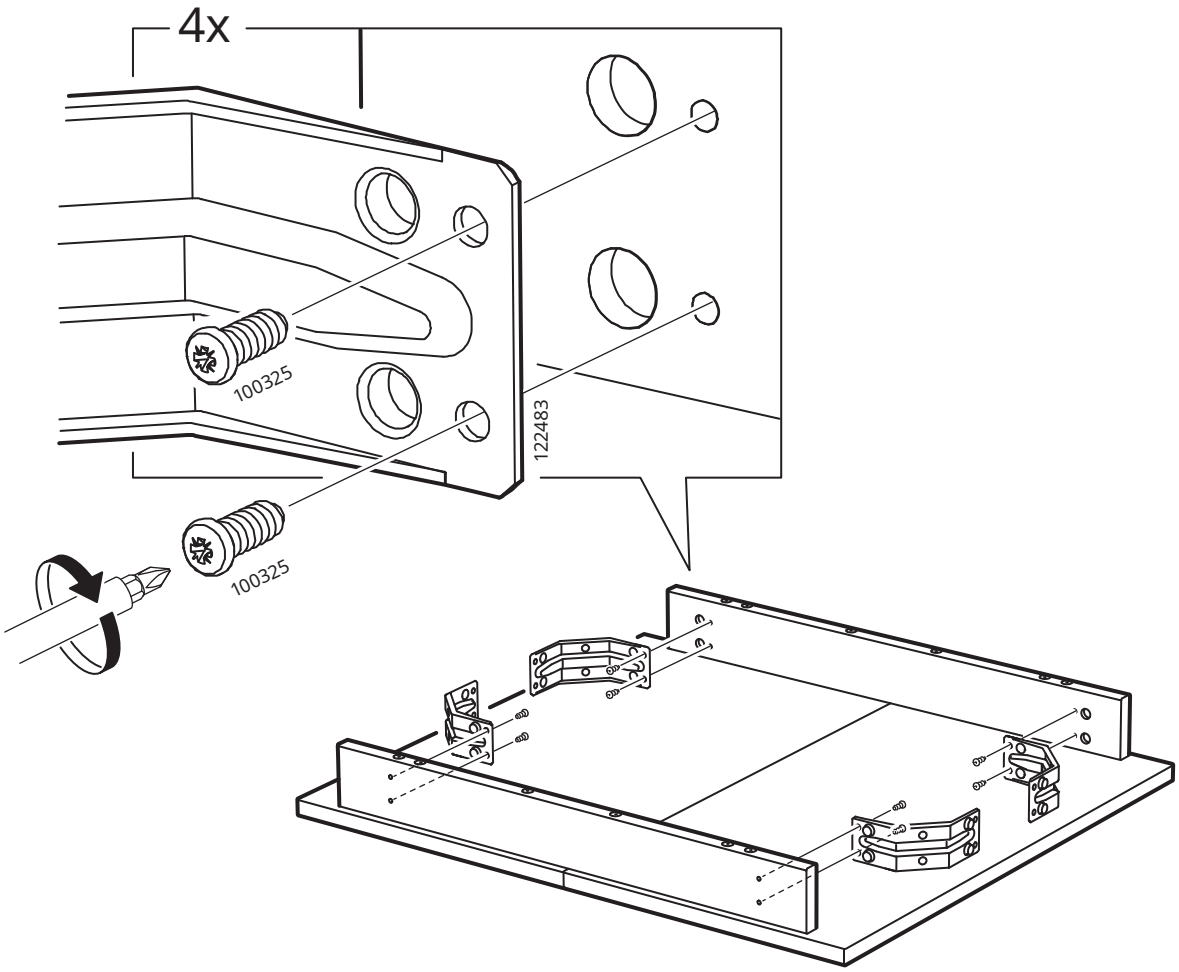

5

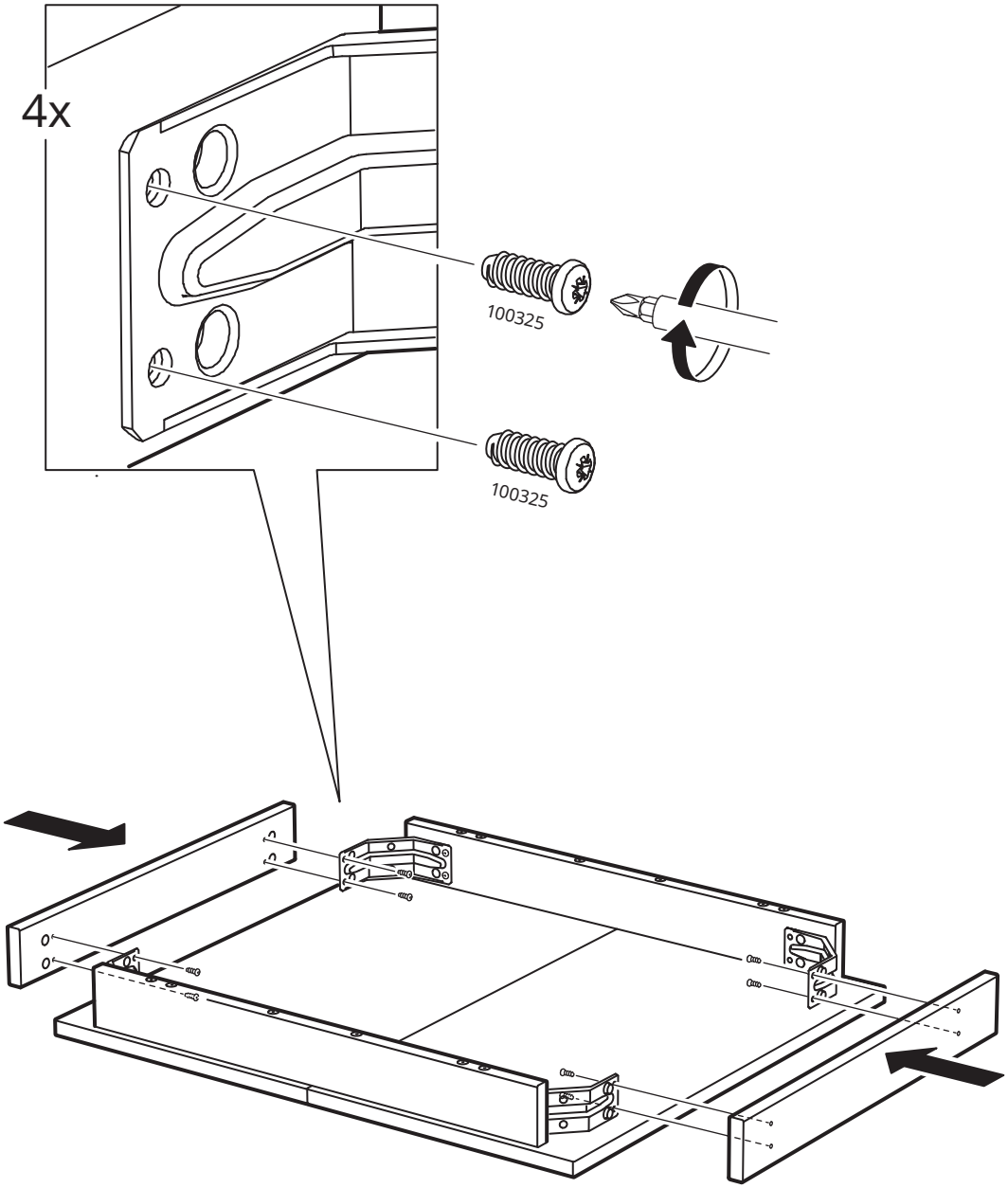

6

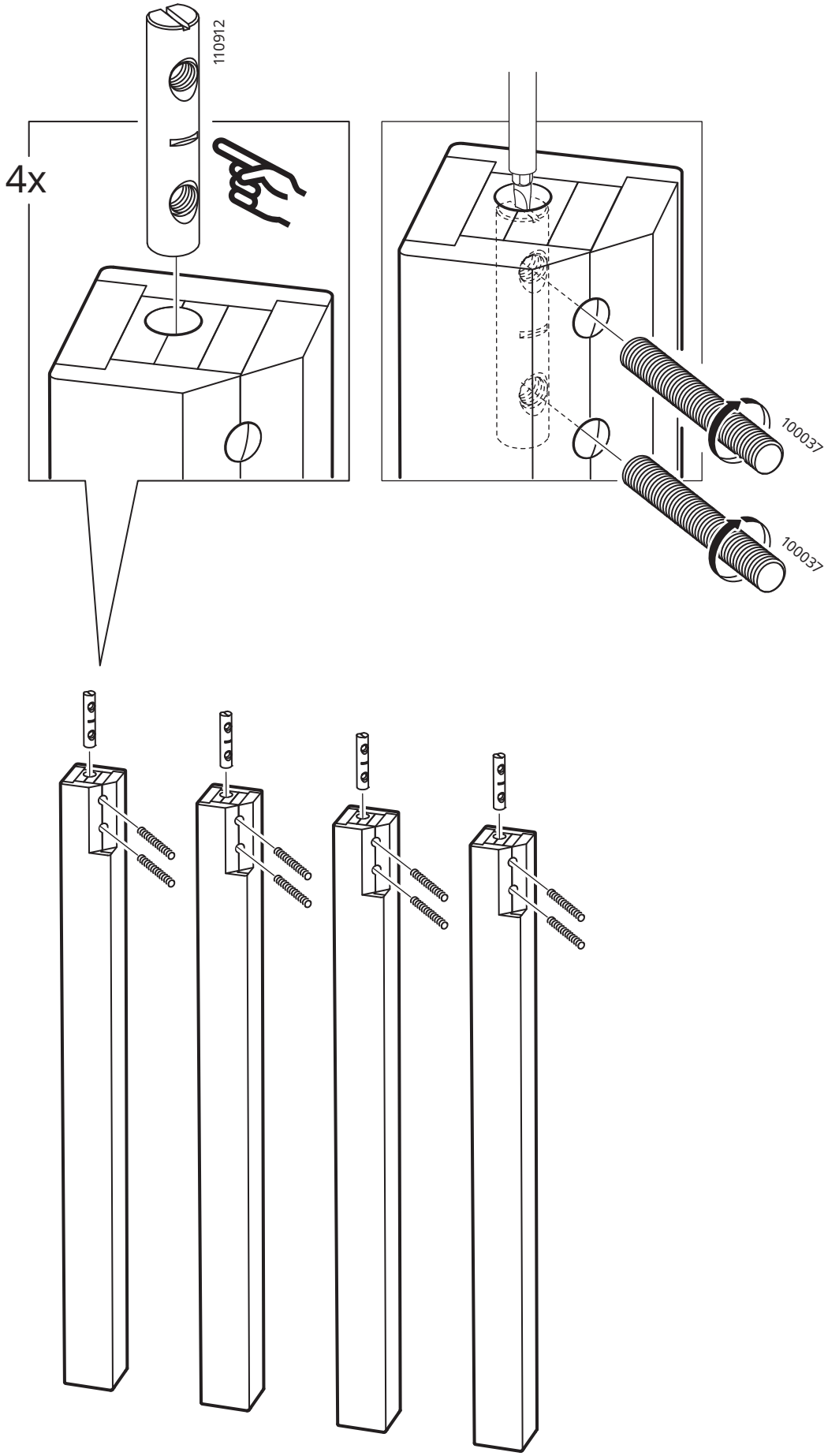

7

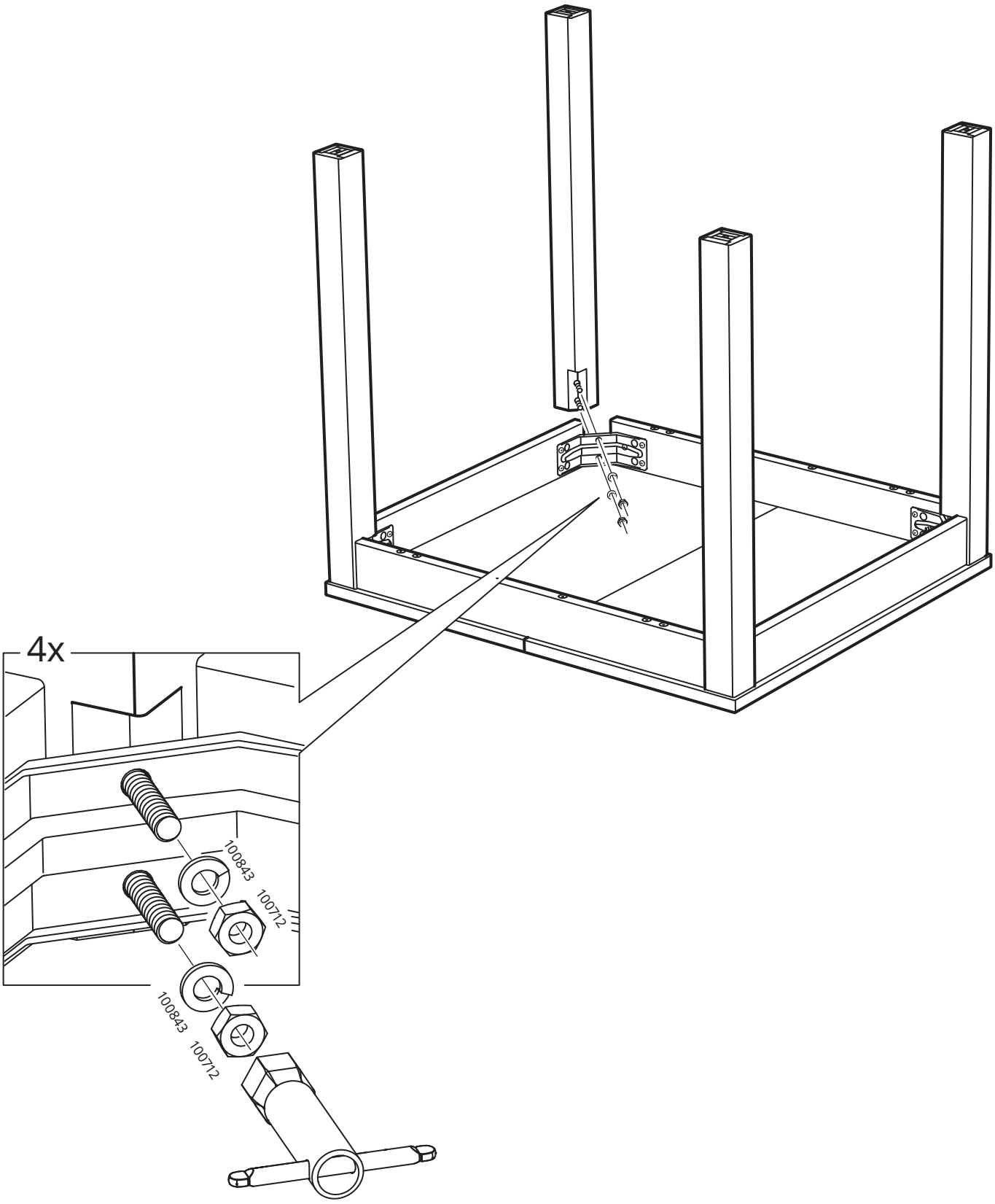

8

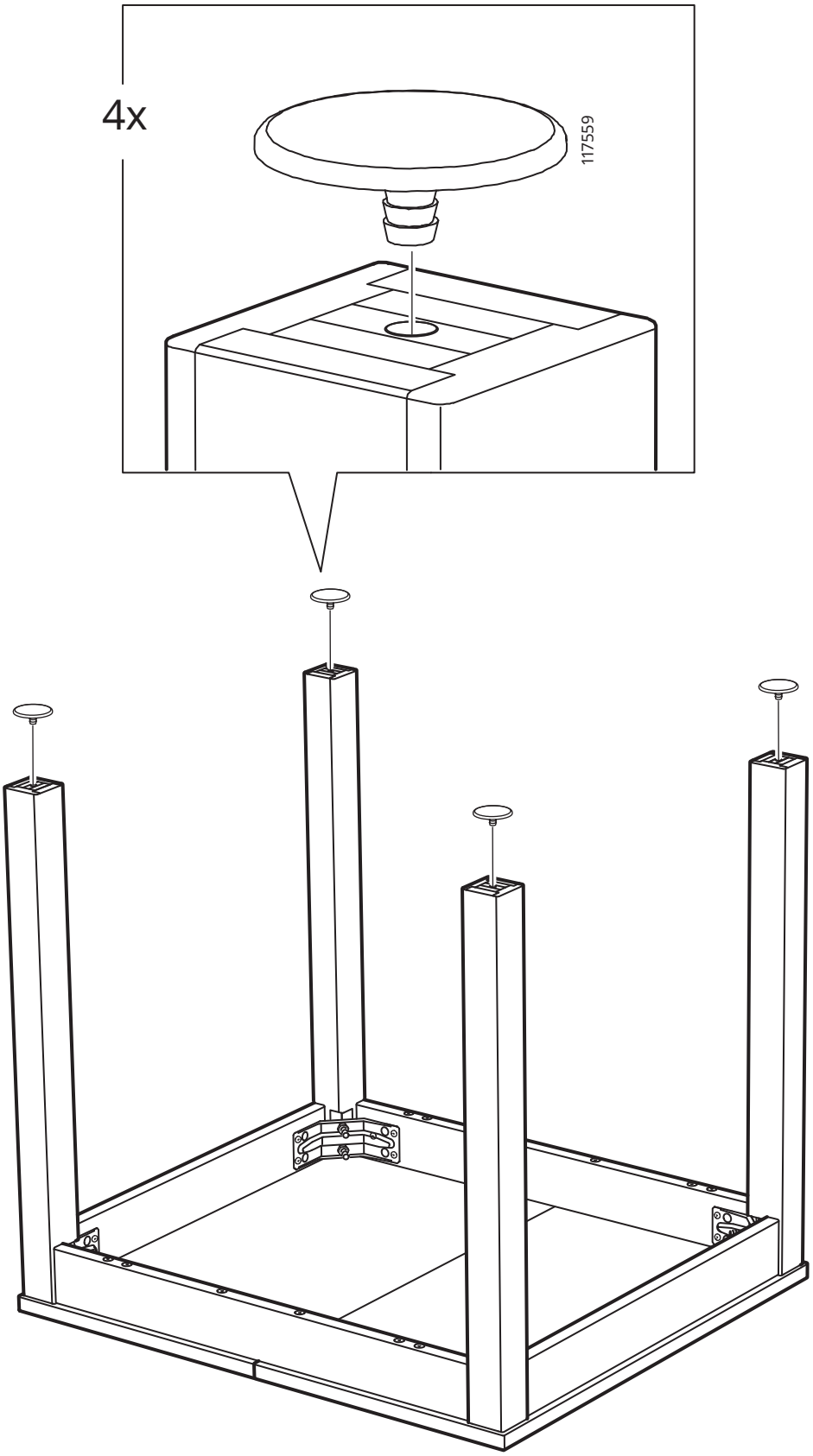

© Inter IKEA Systems B.V. 2020
2021-01-18 AA-2262241-3