SLATTUM

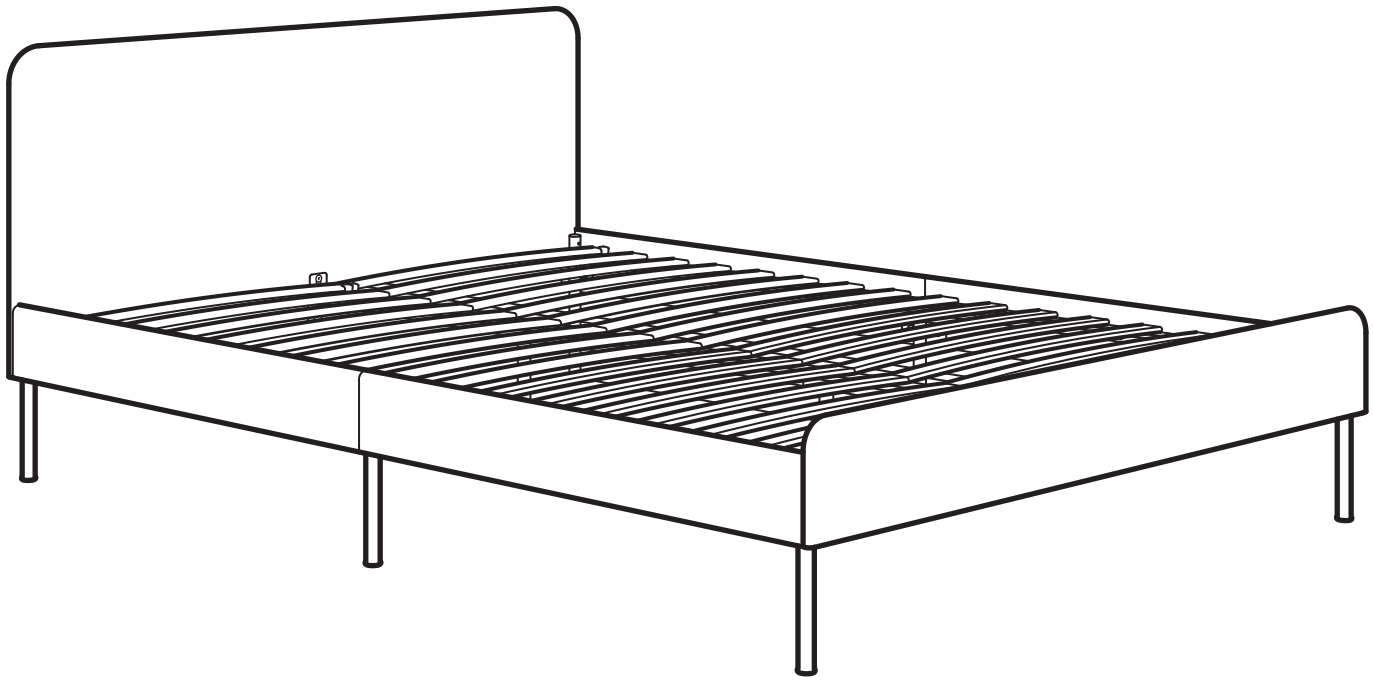

Design and Quality
IKEA of Sweden

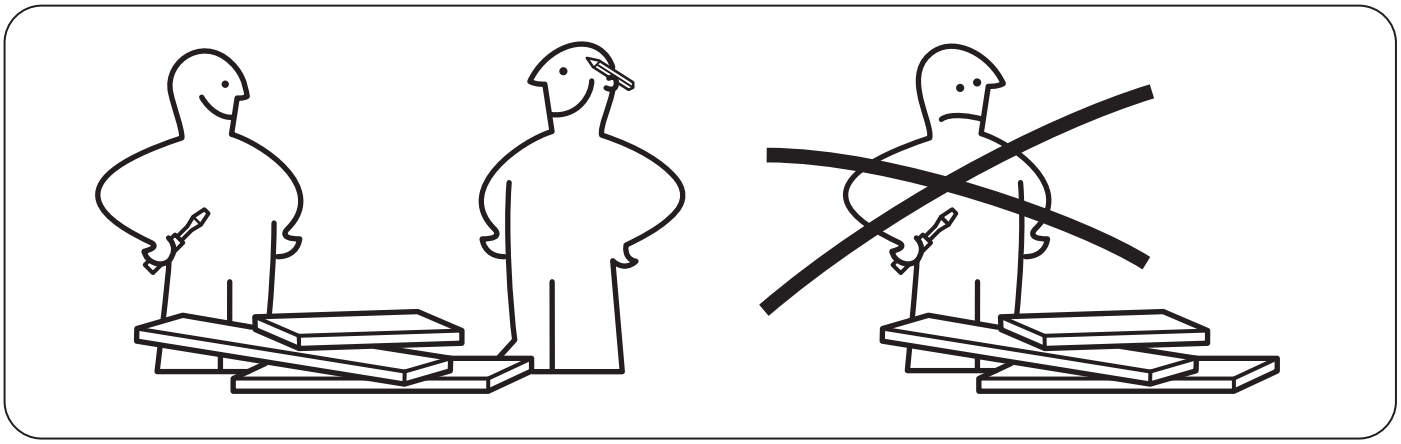

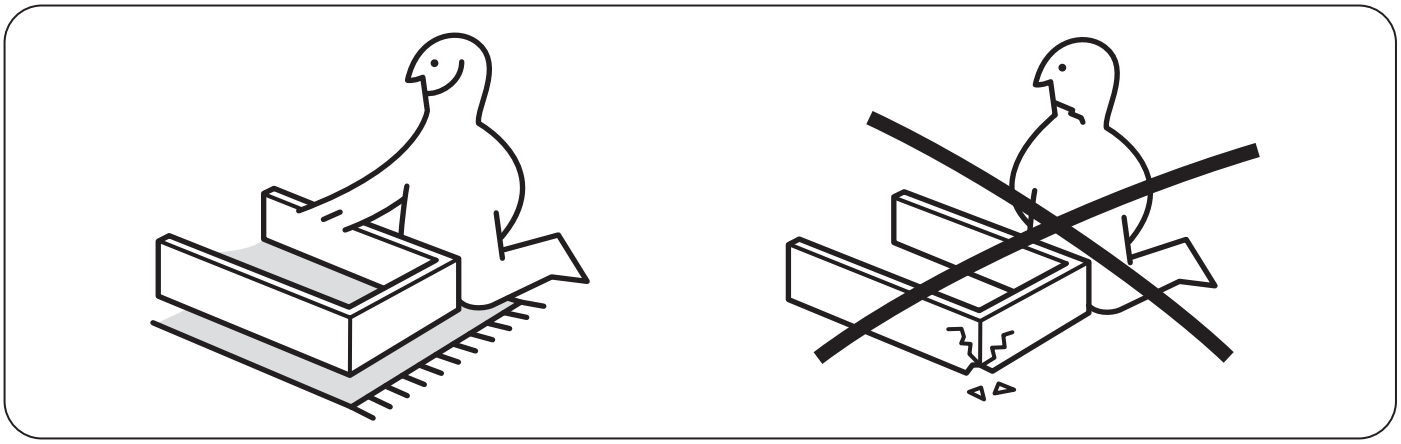

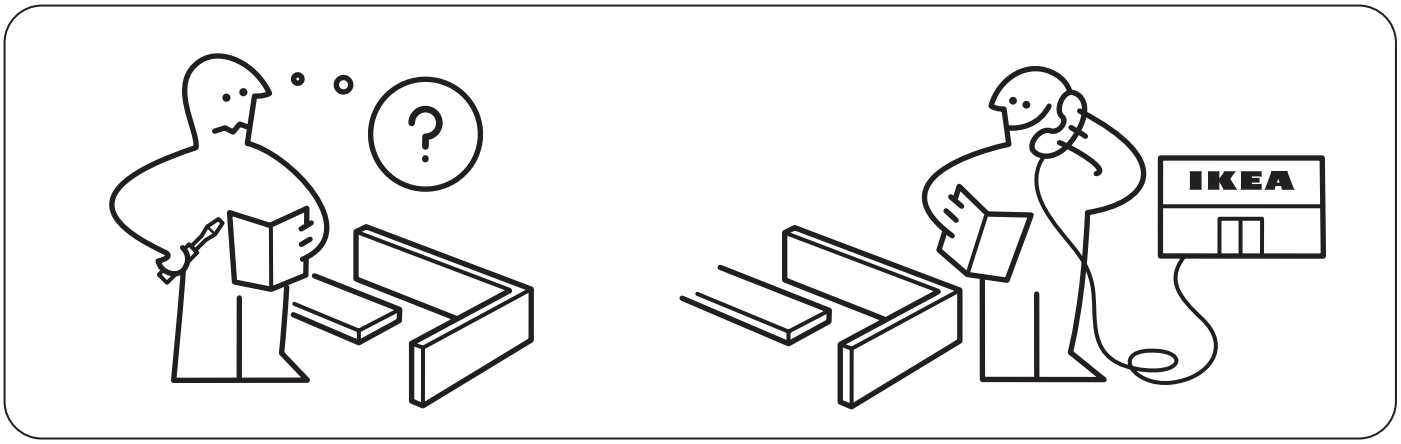
?
IKEA

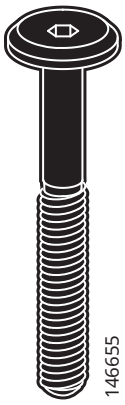

3x

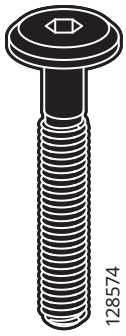

26x

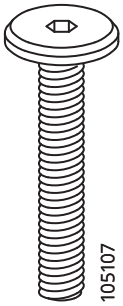

4x

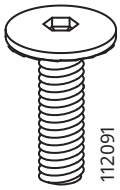

12x

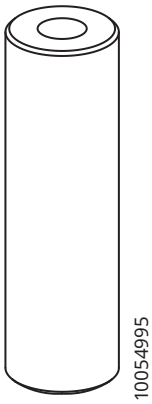

1x

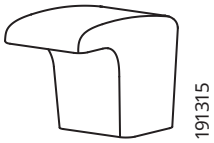

8x

2x

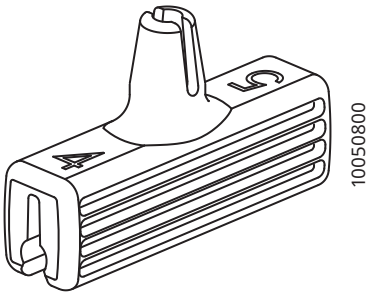

2x

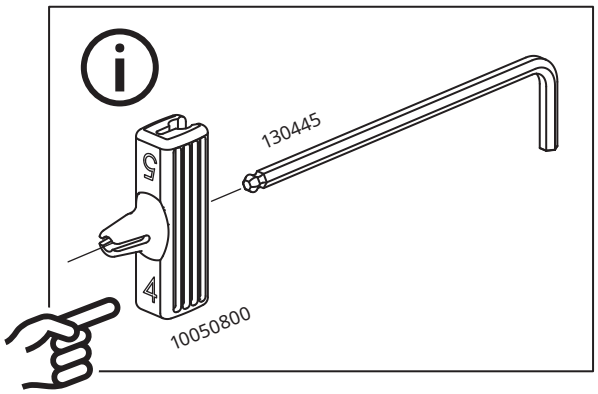

1

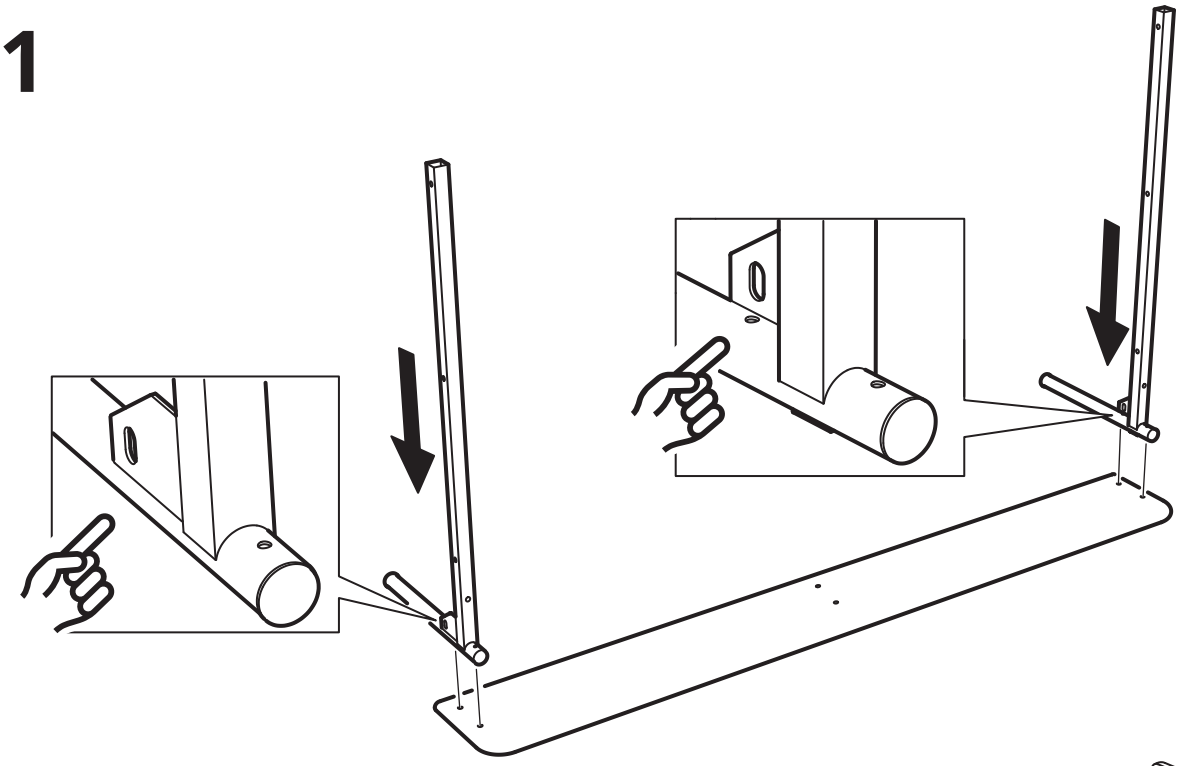

2

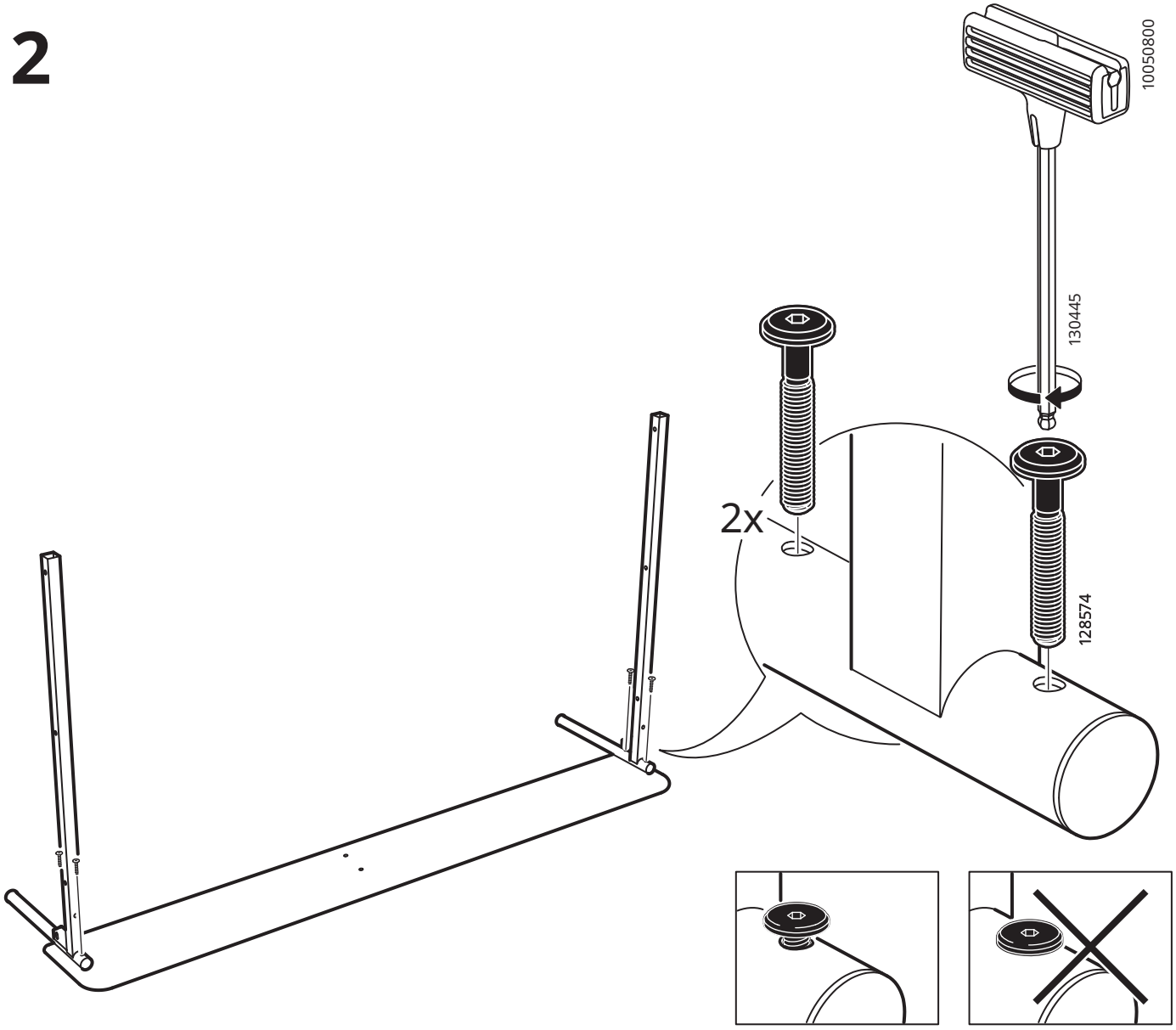

3

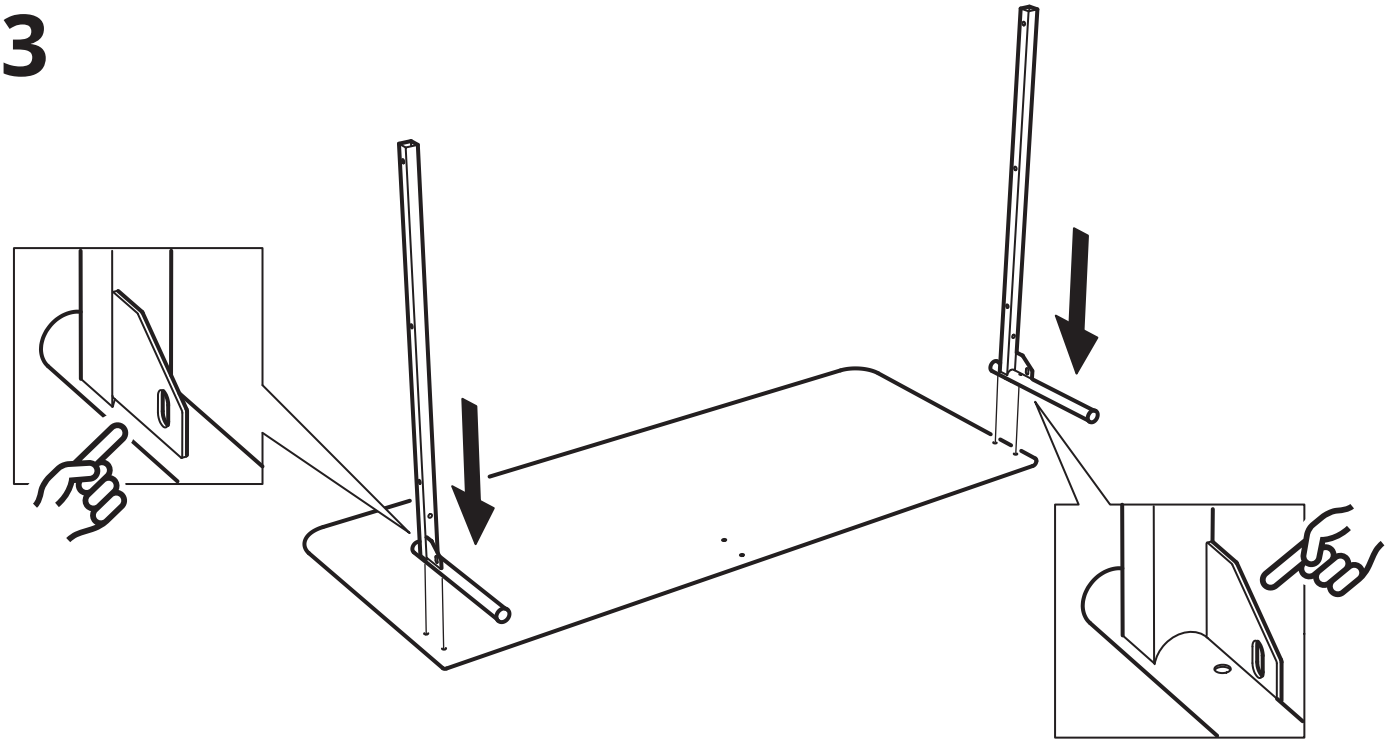

4

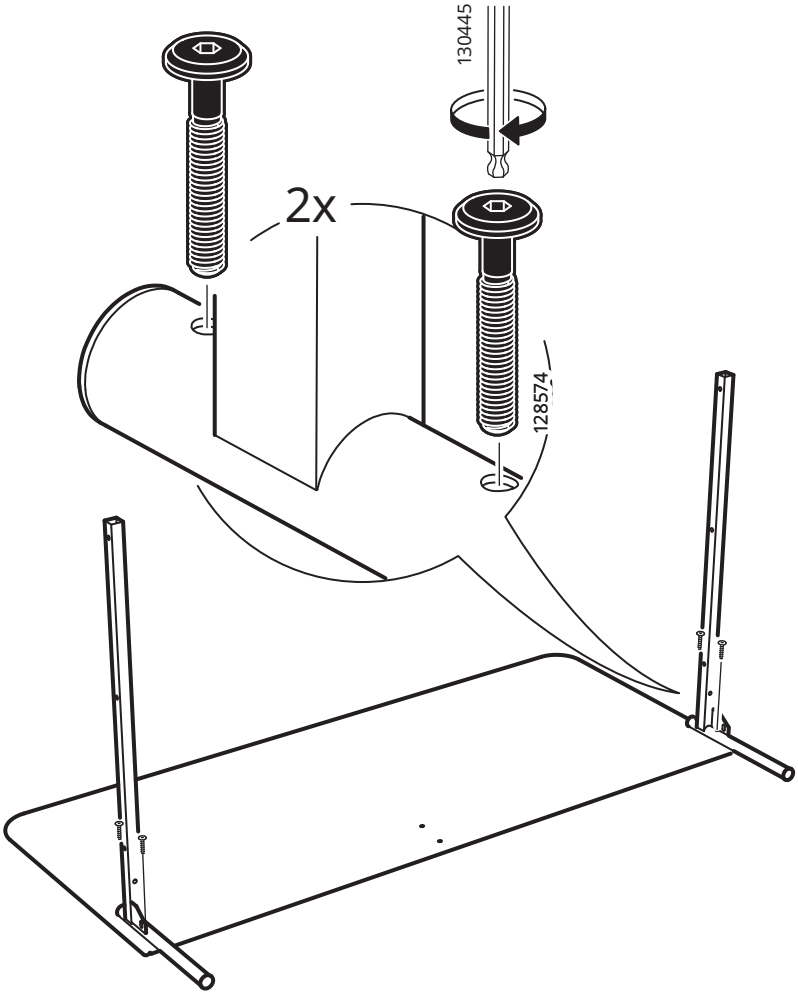

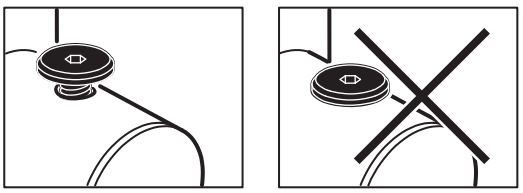

5

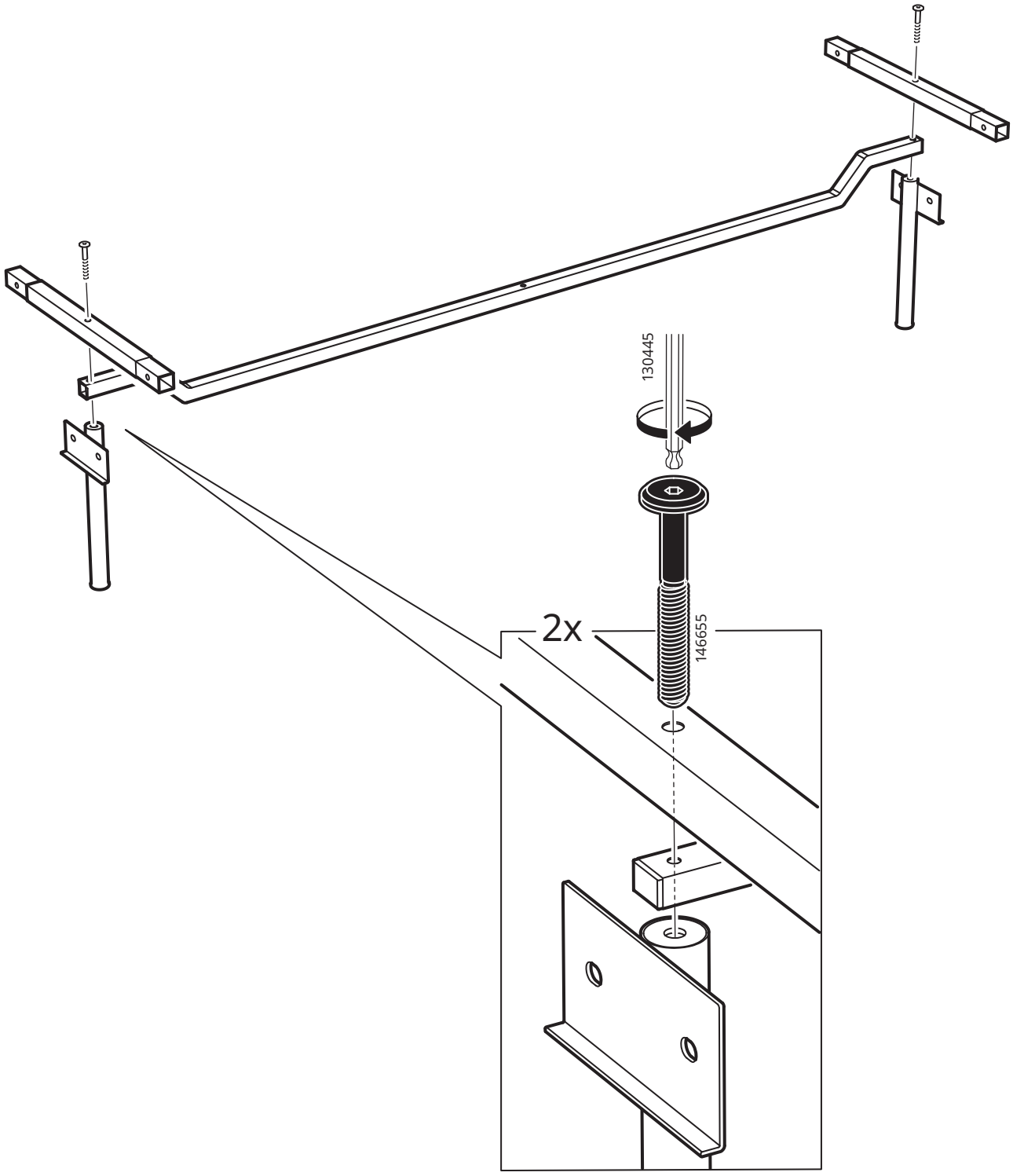

6

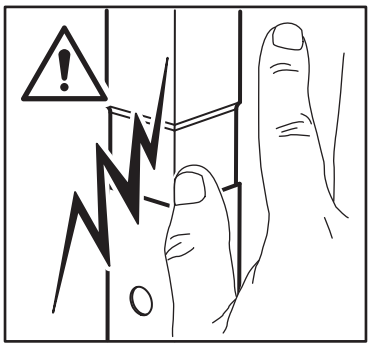

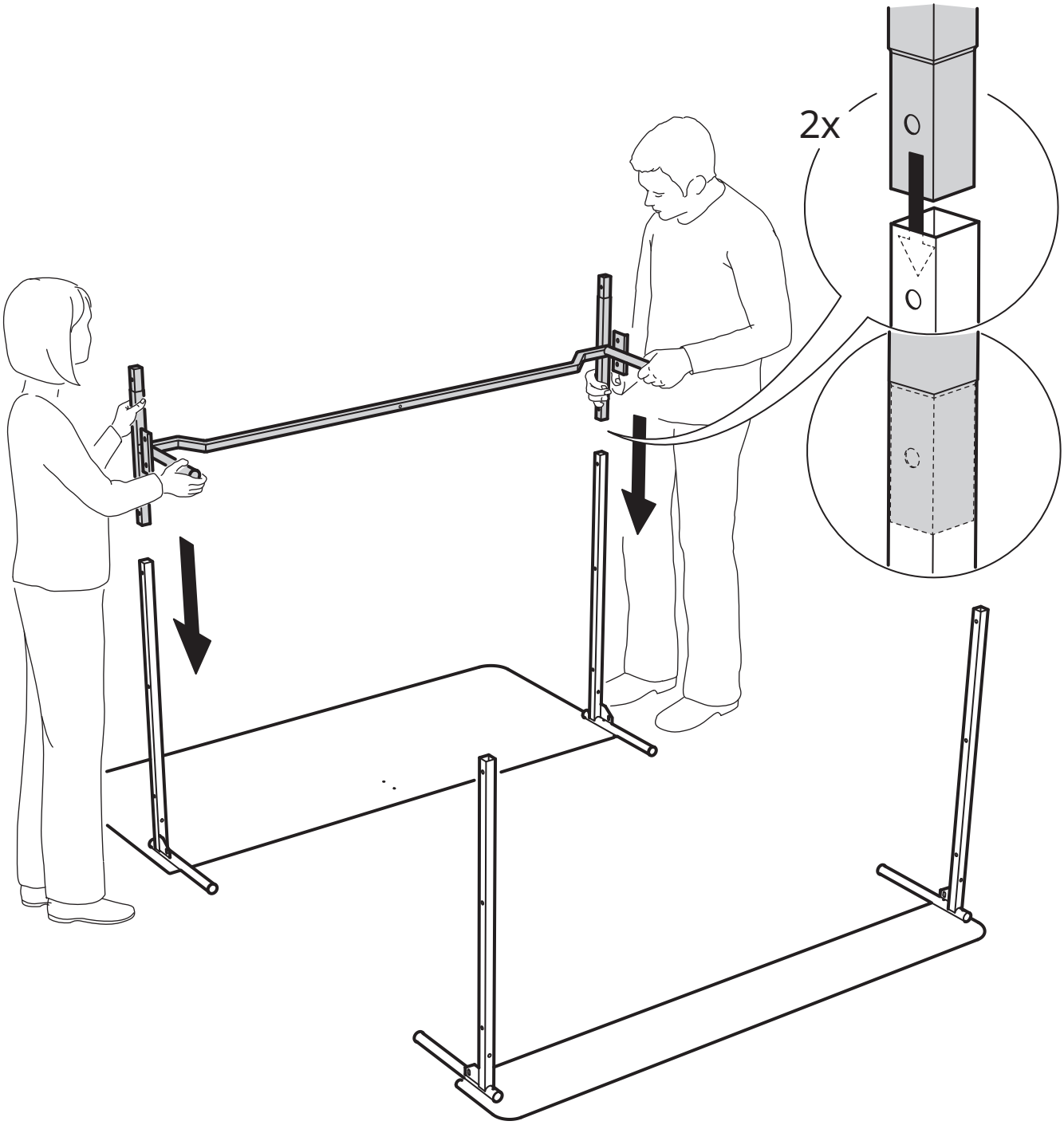

7

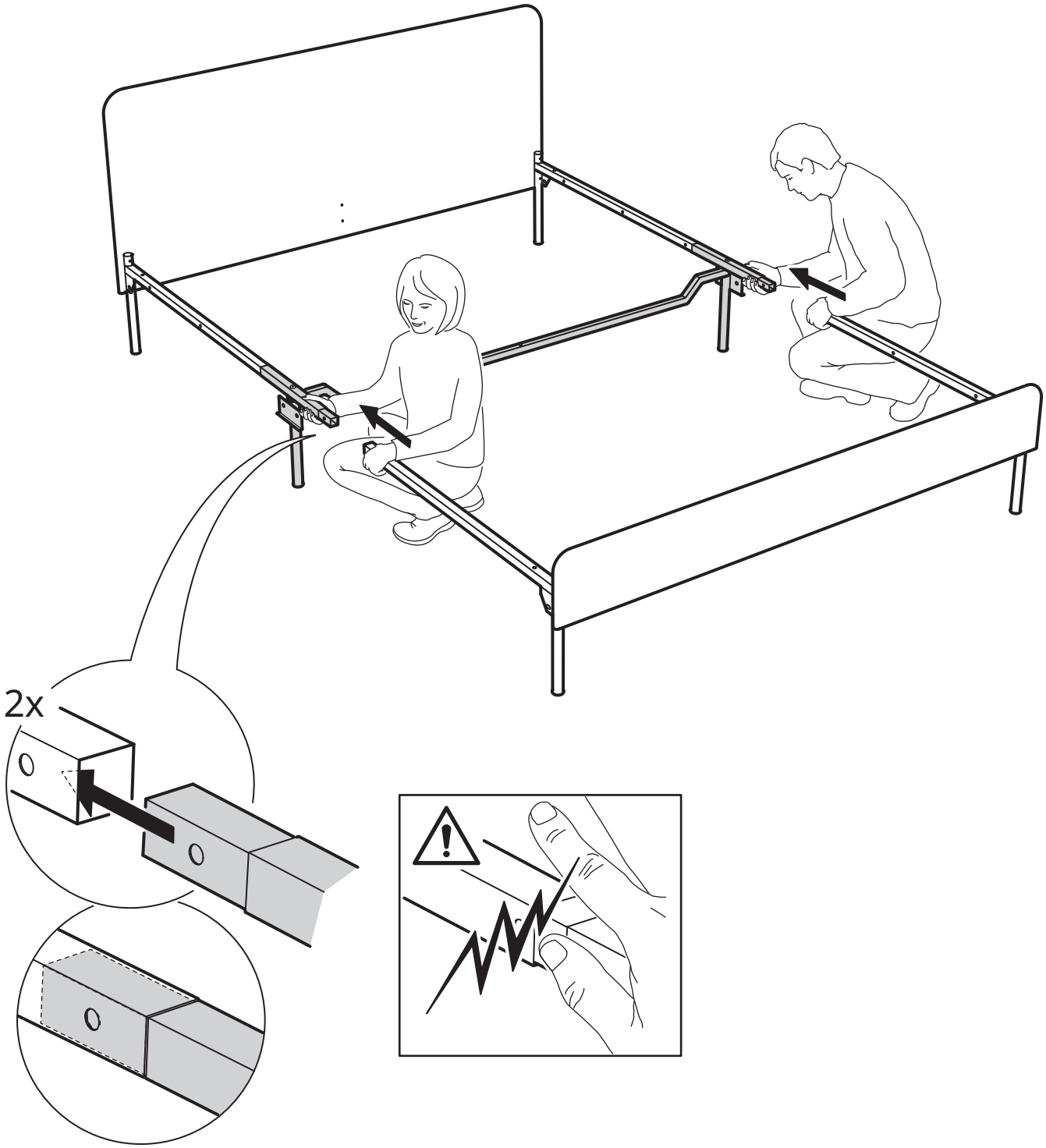

8

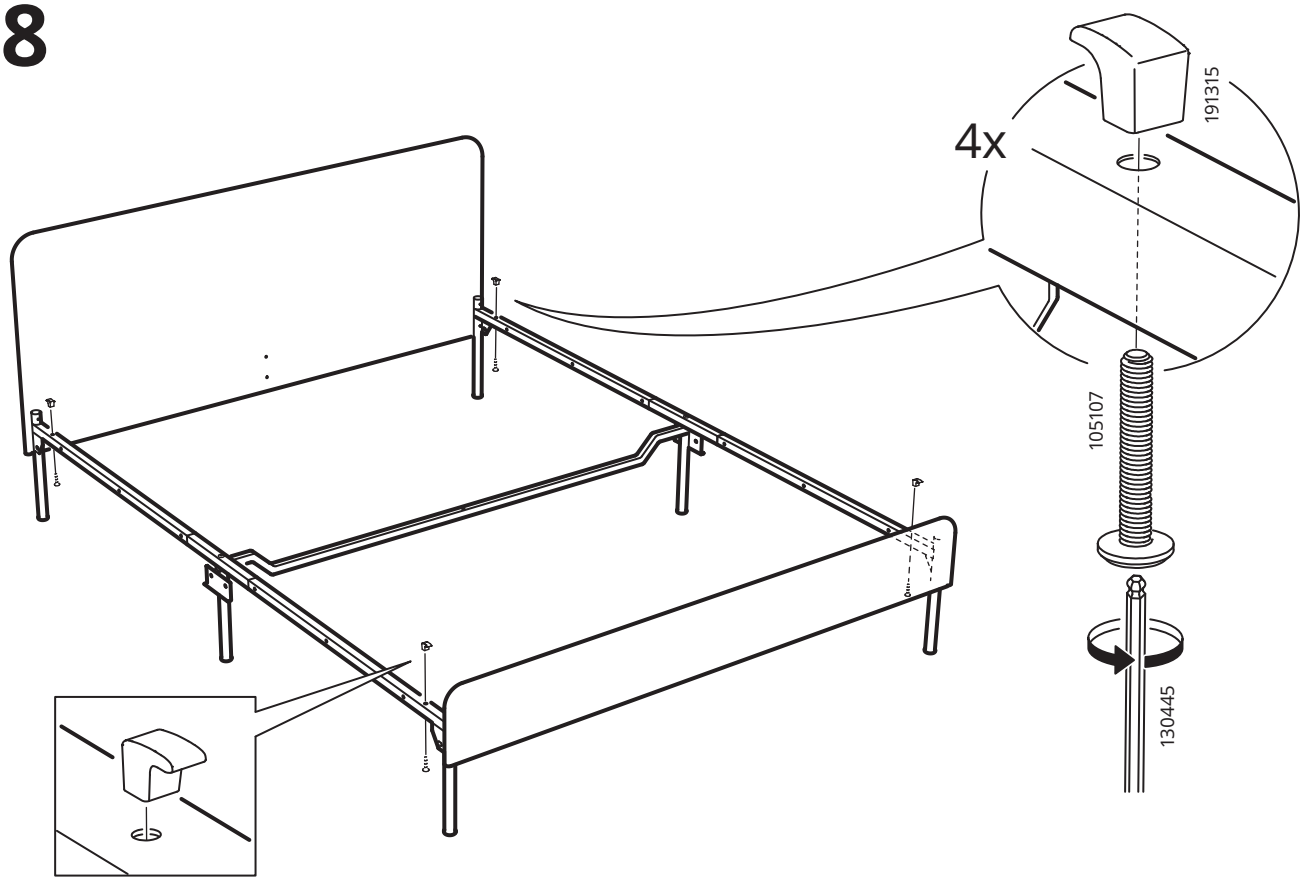

9

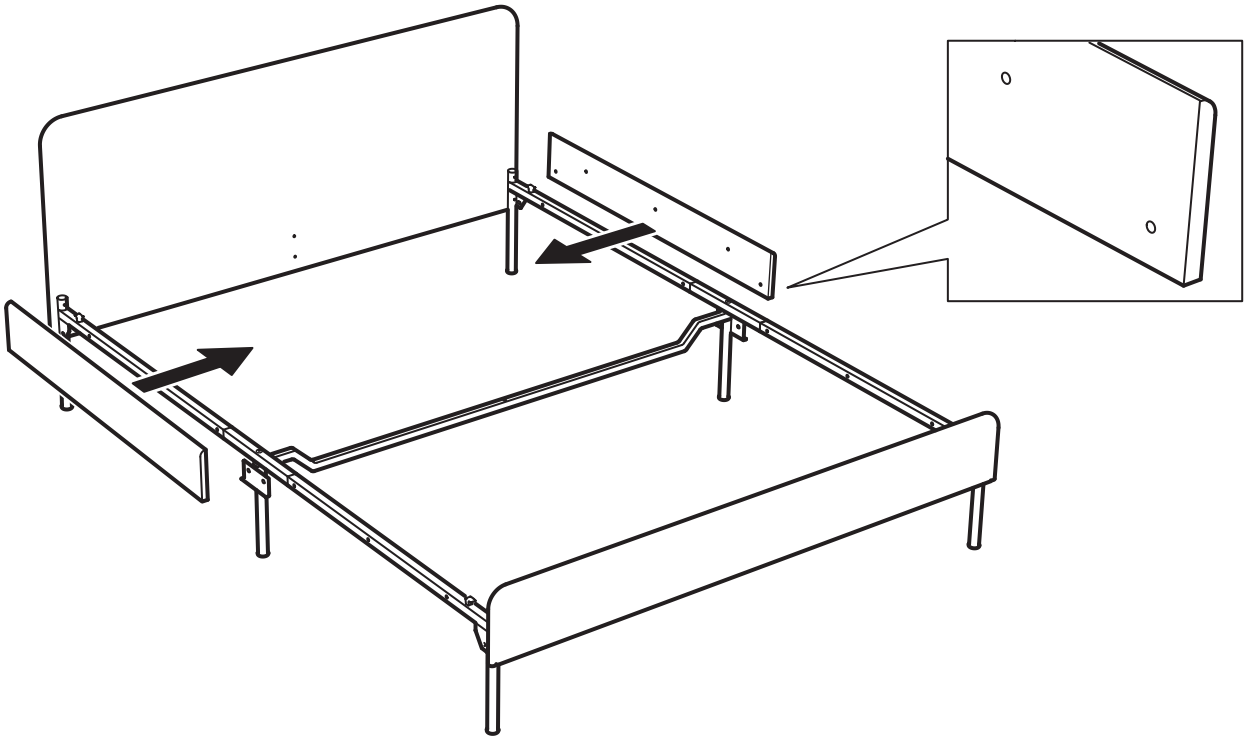

10

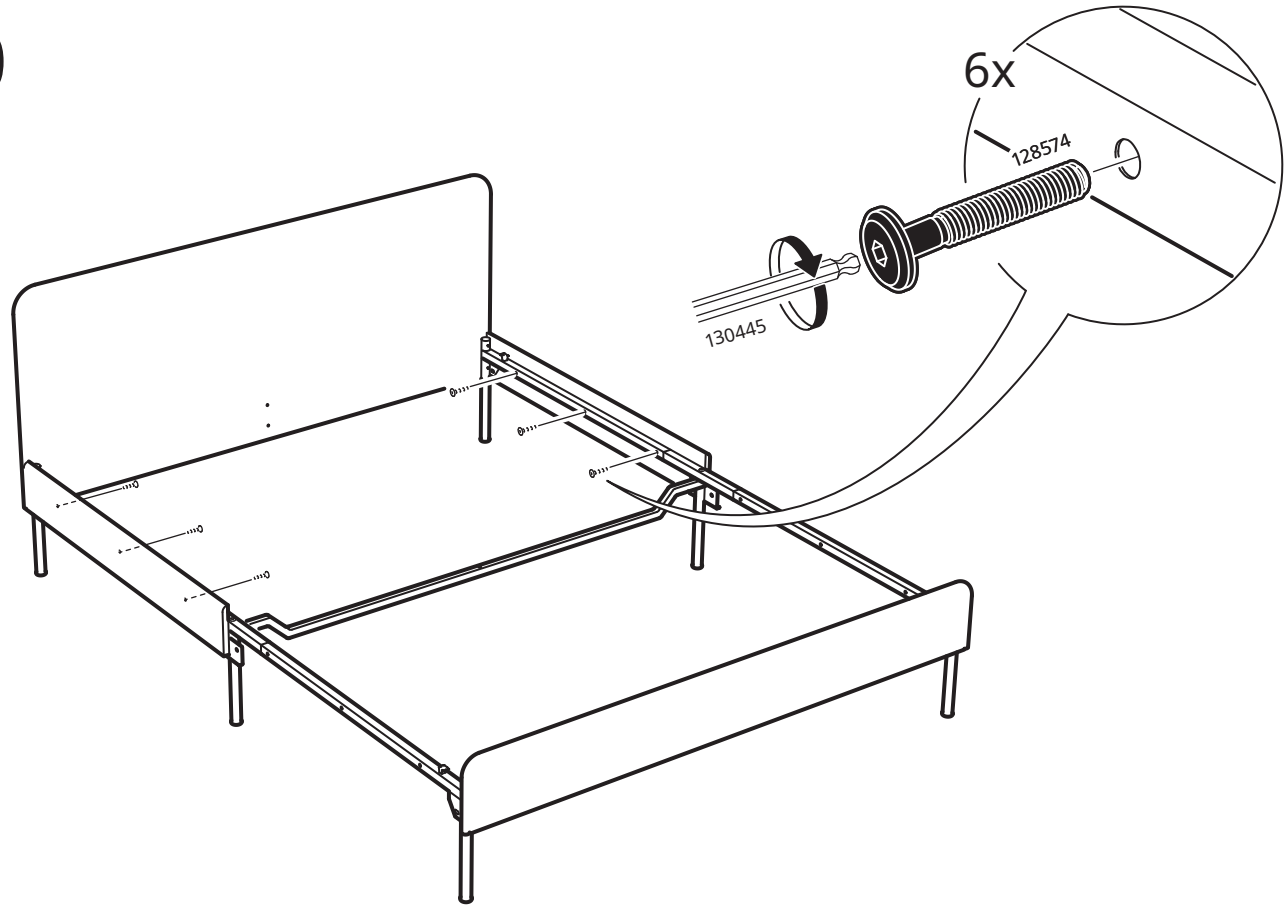

11

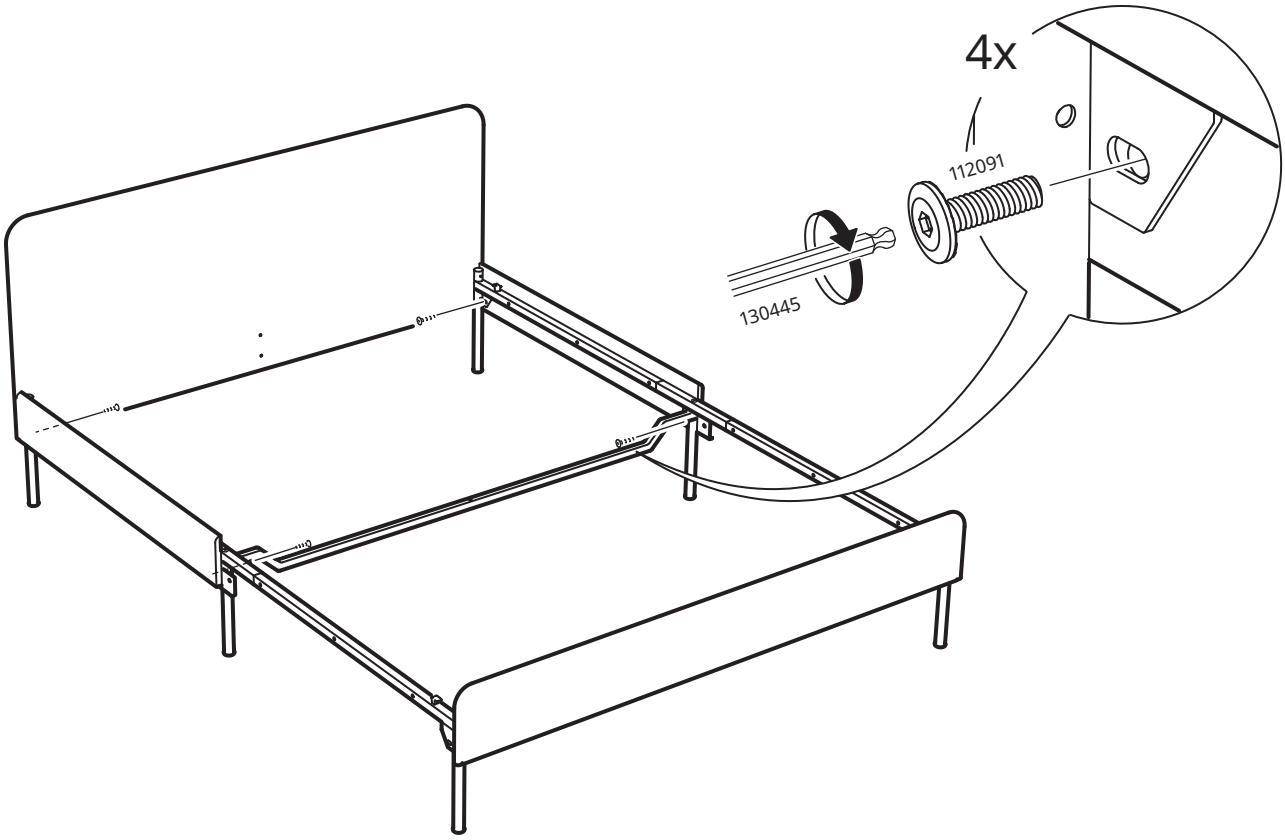

12

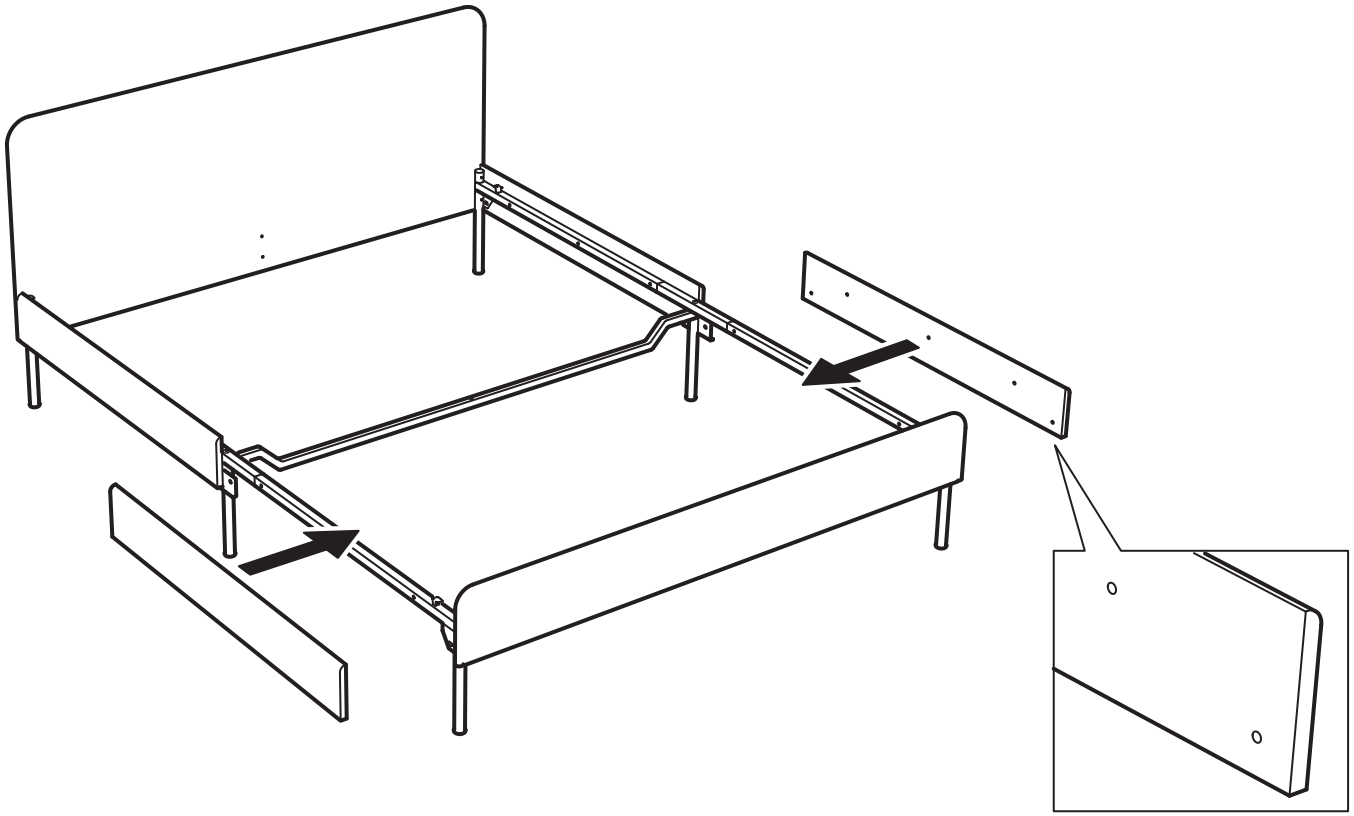

13

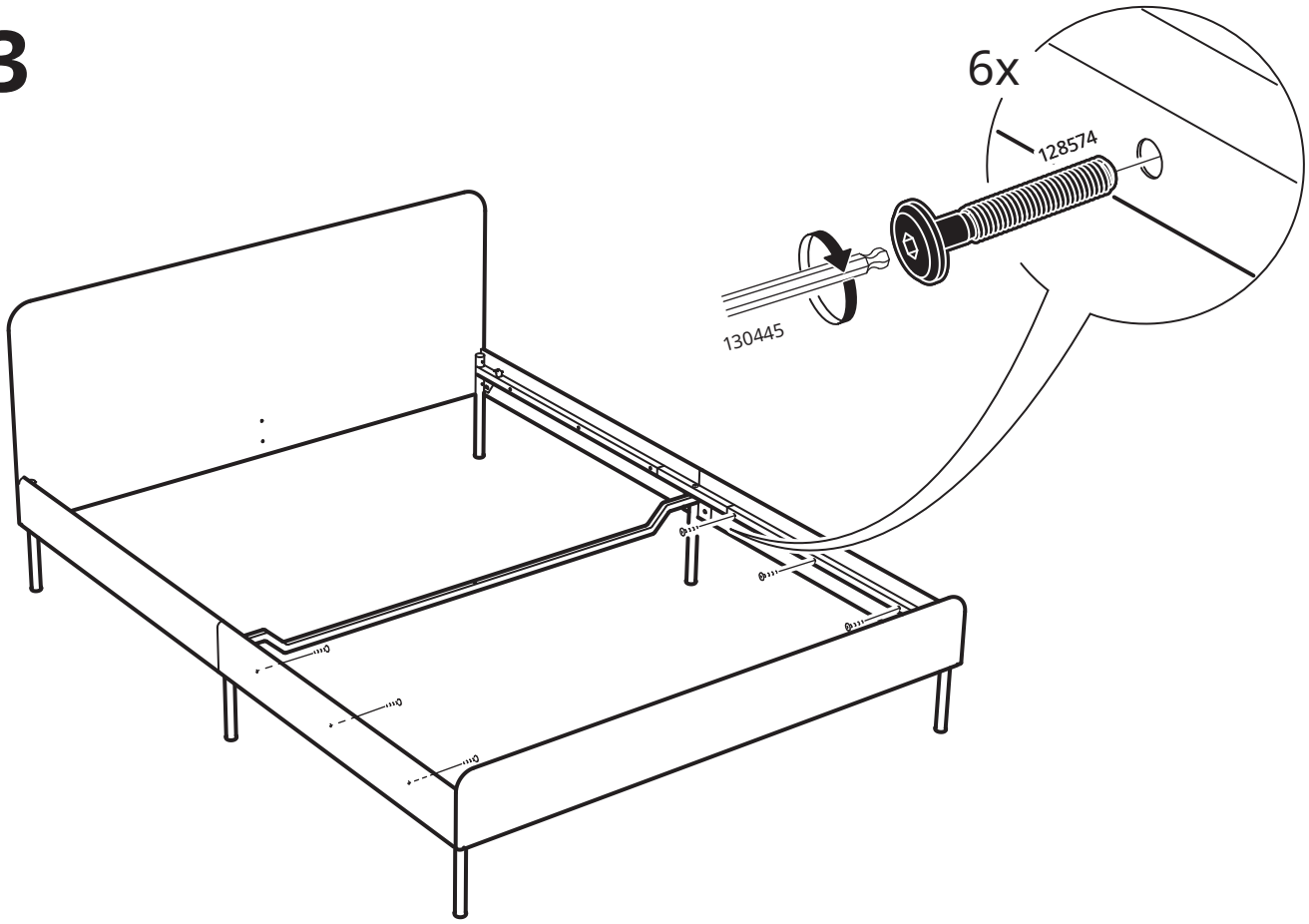

14

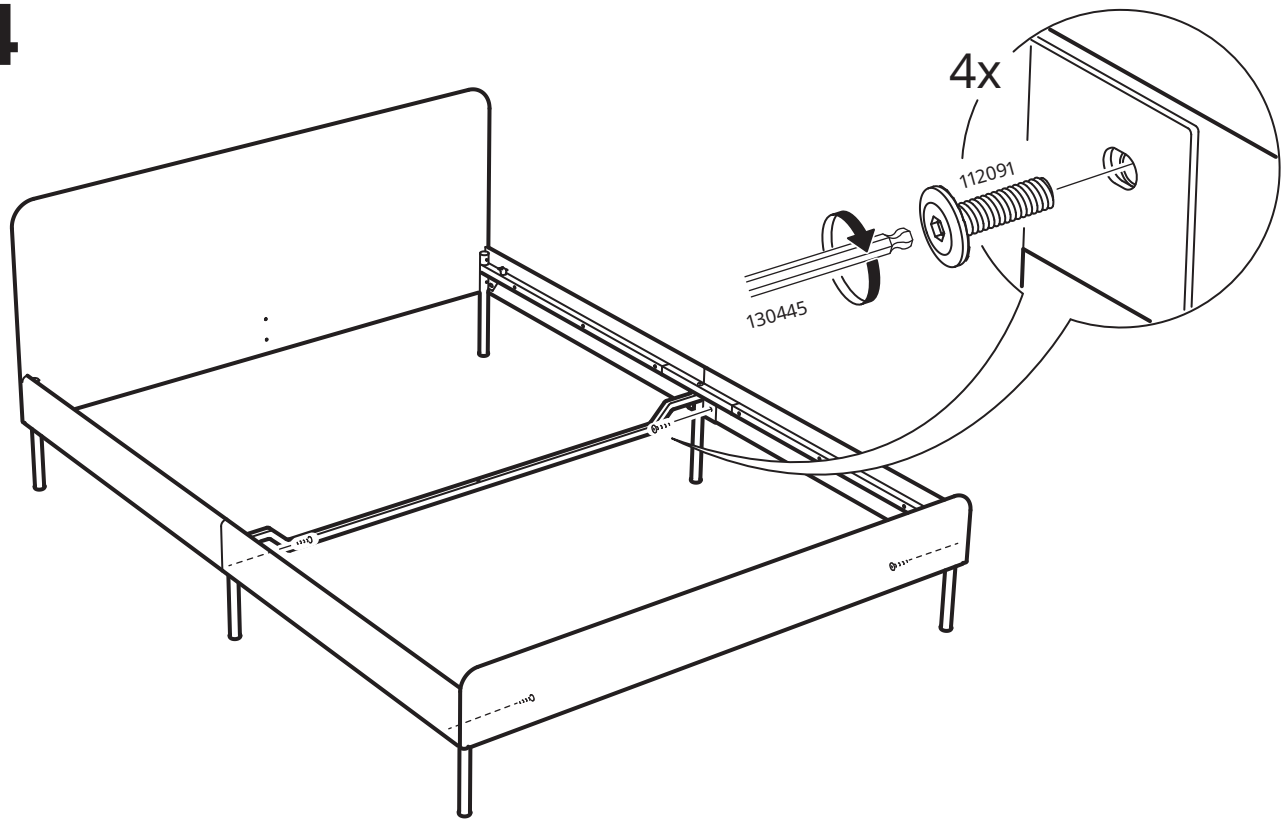

15

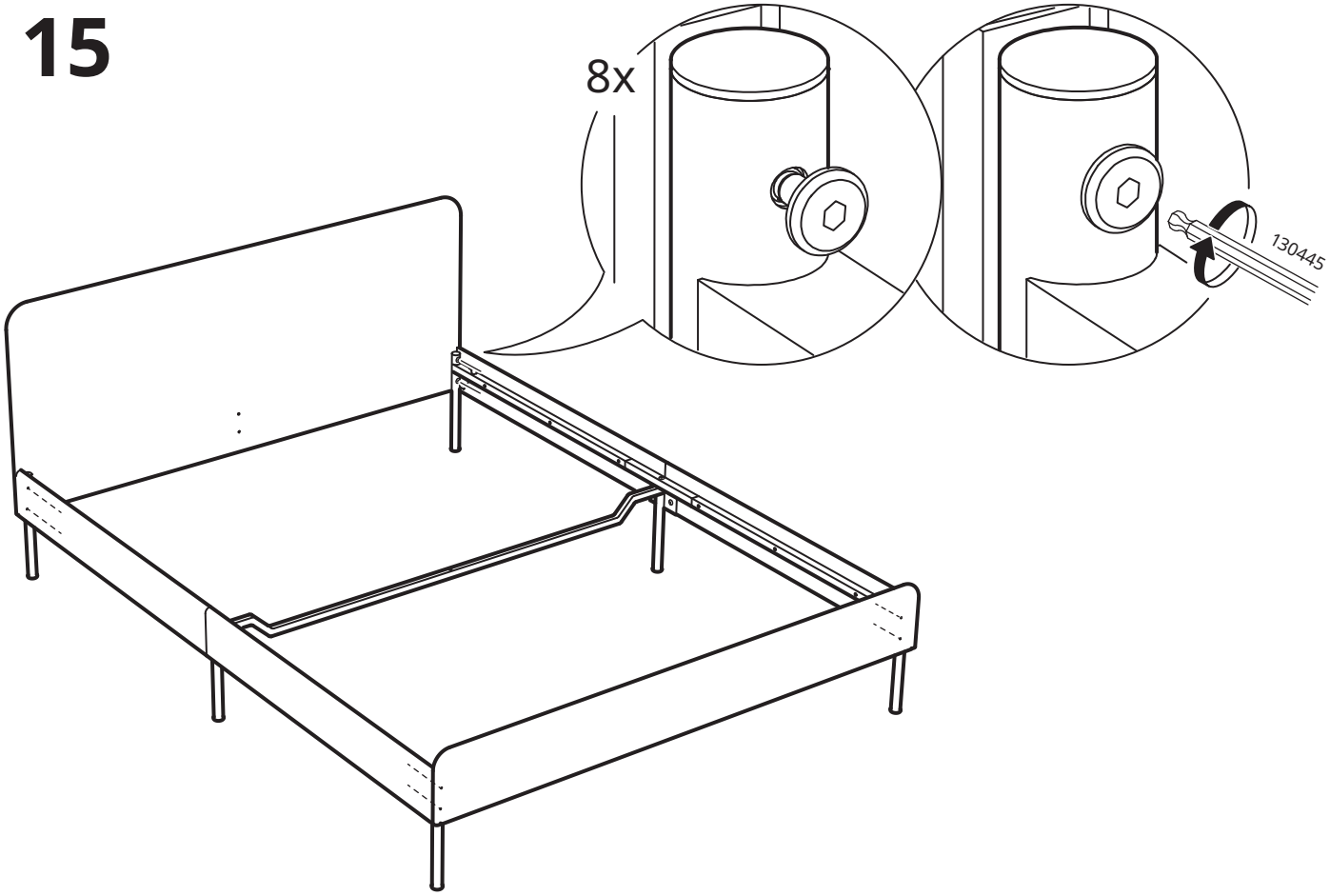

16

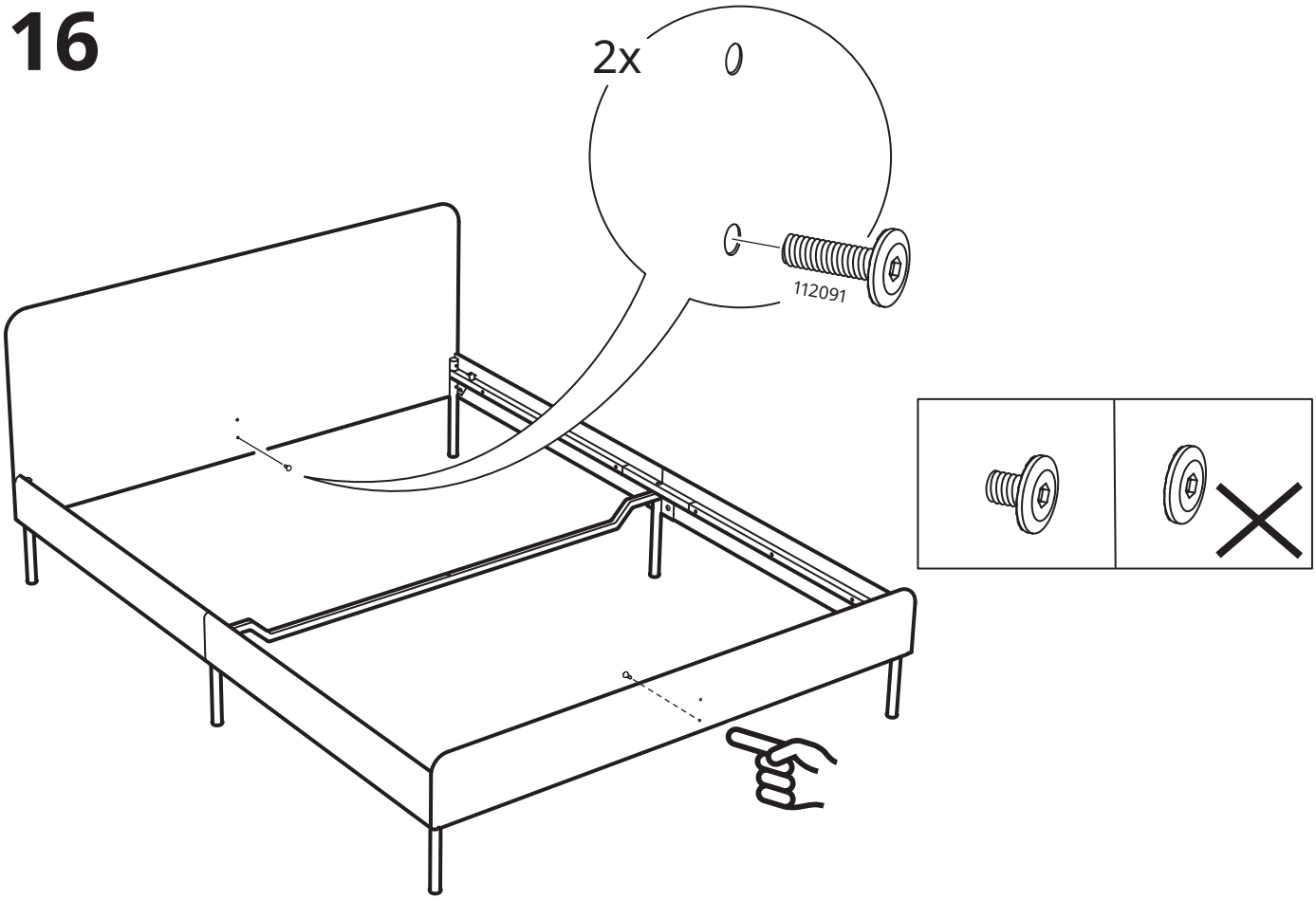

17

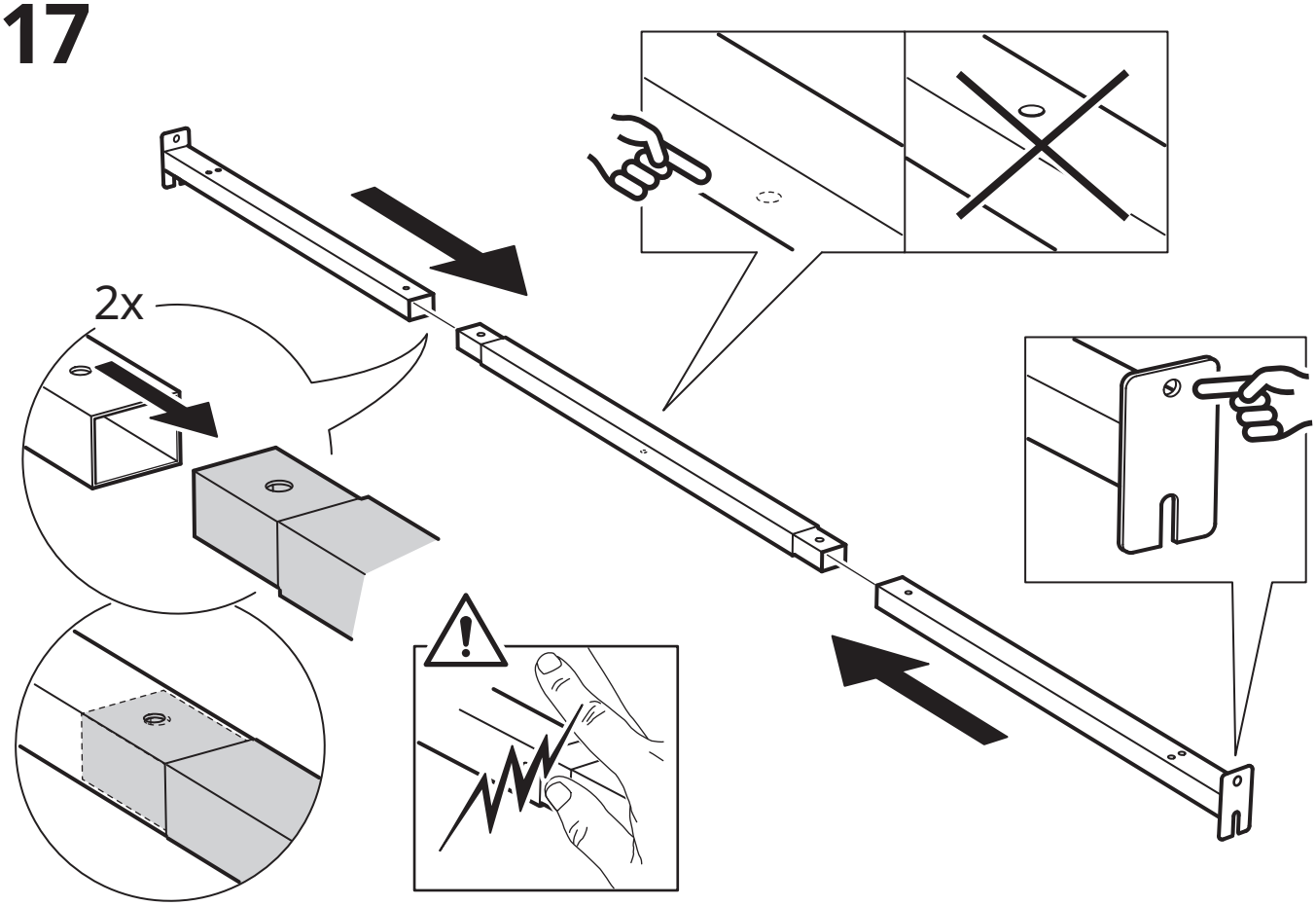

18

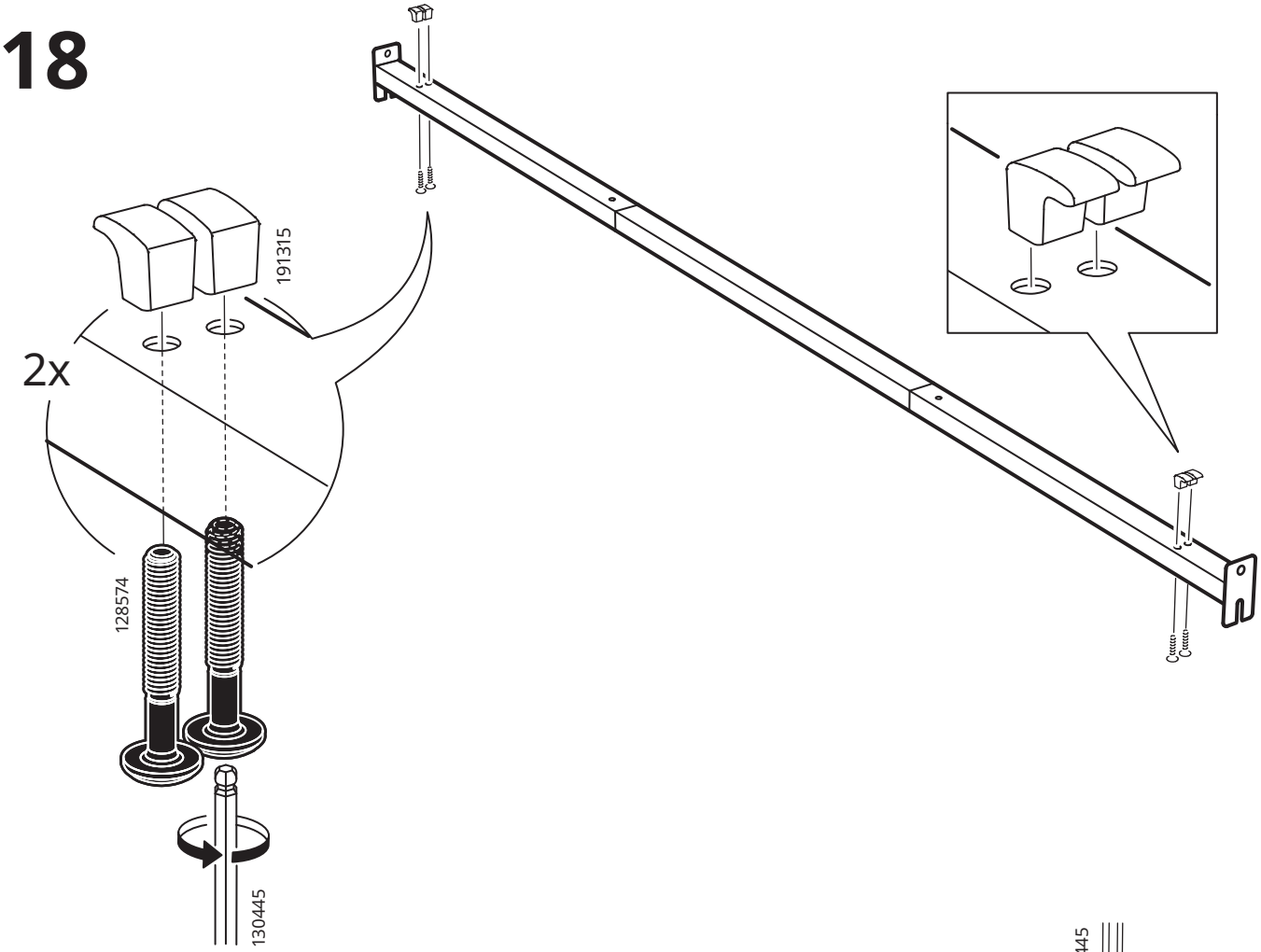

19

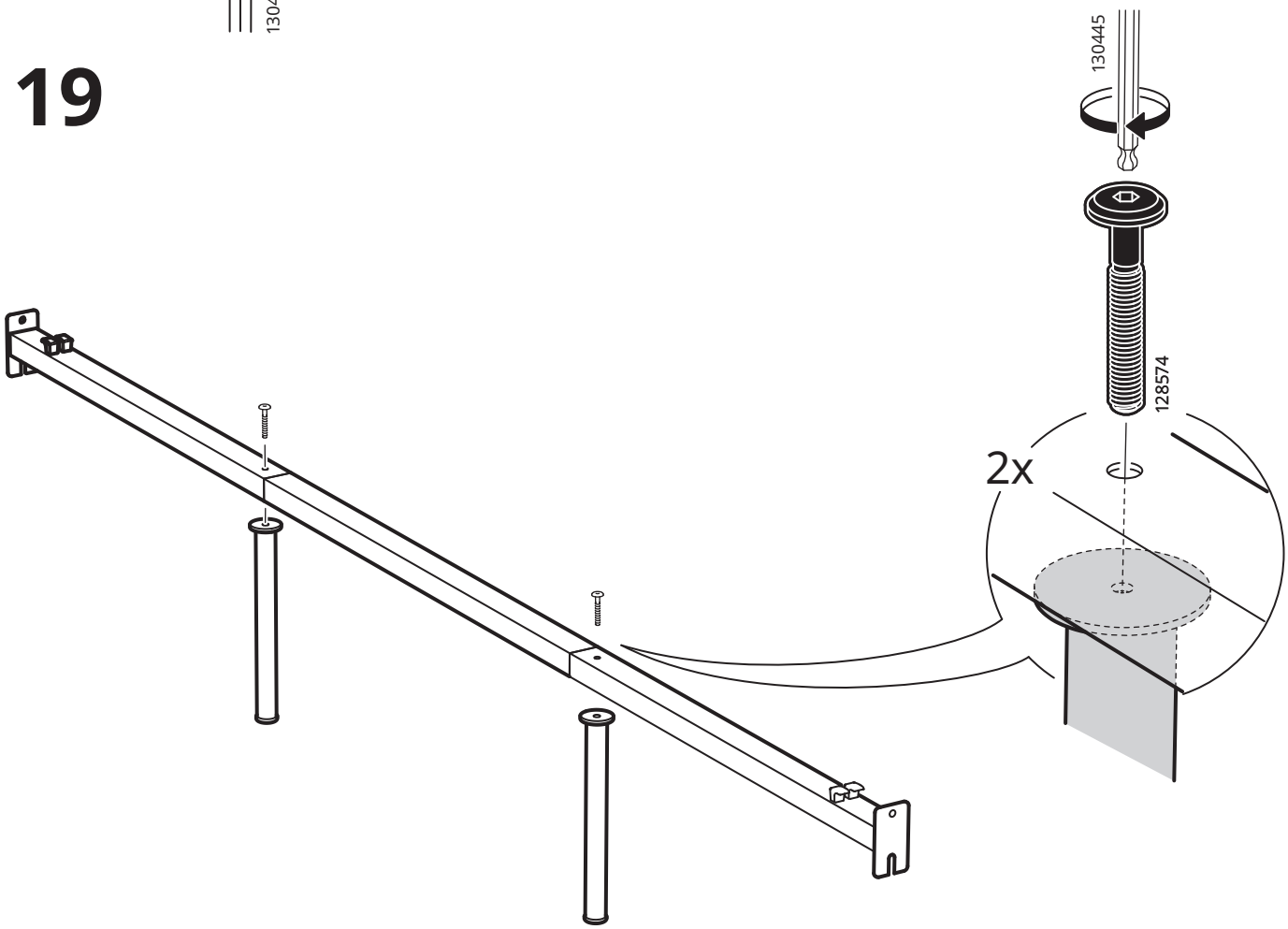

20

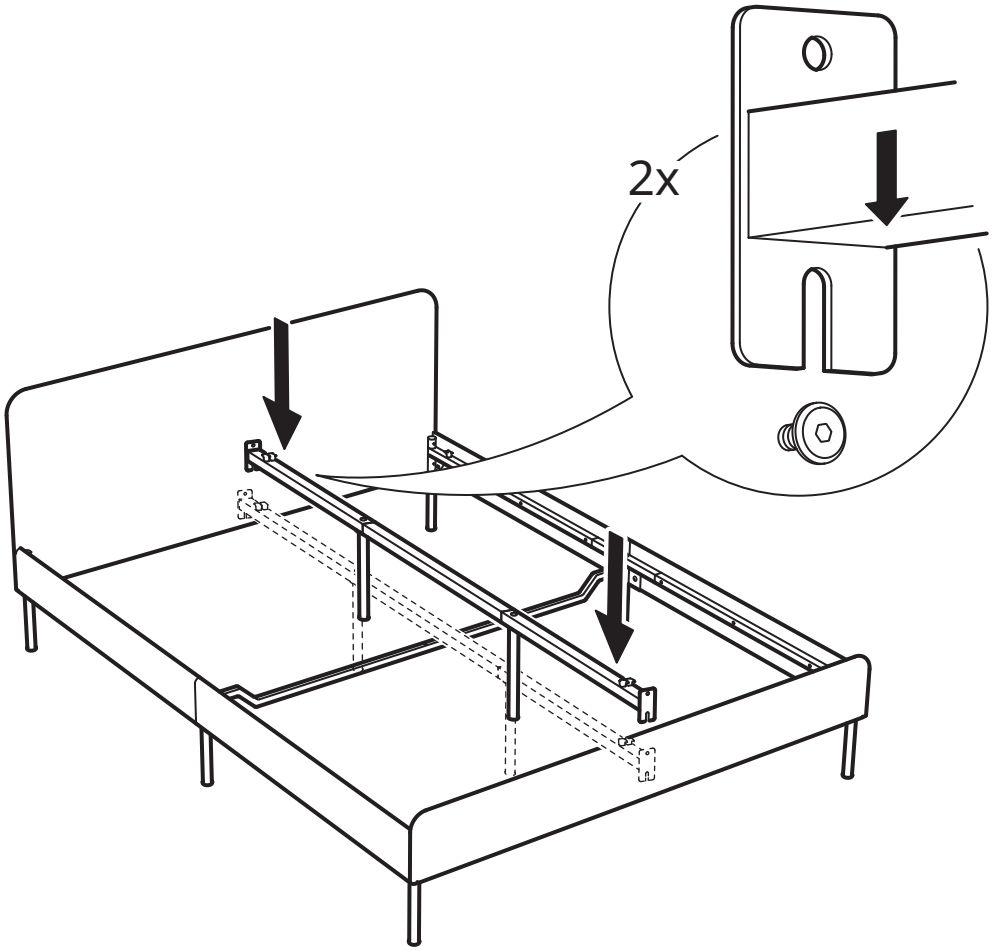

21

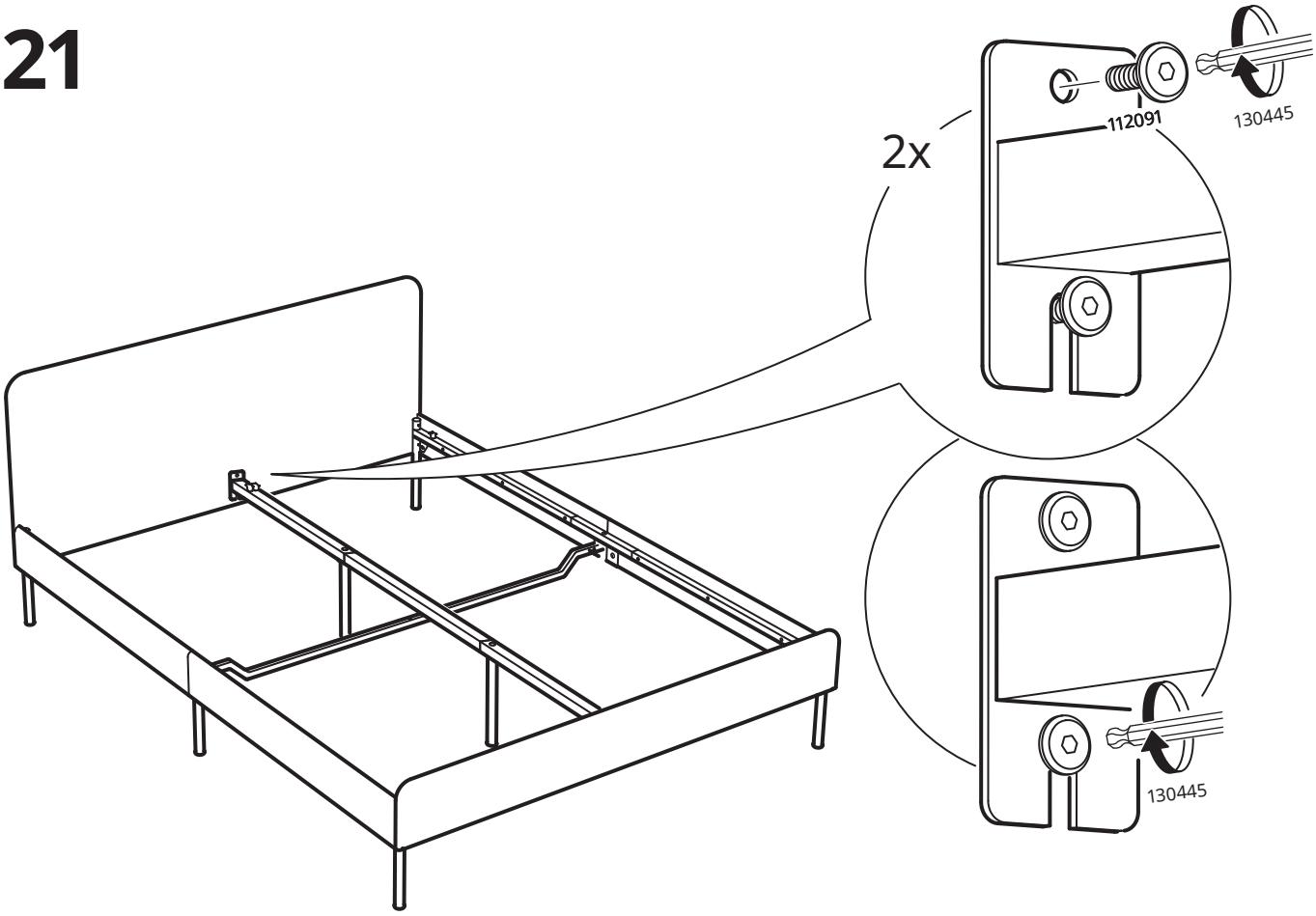

22

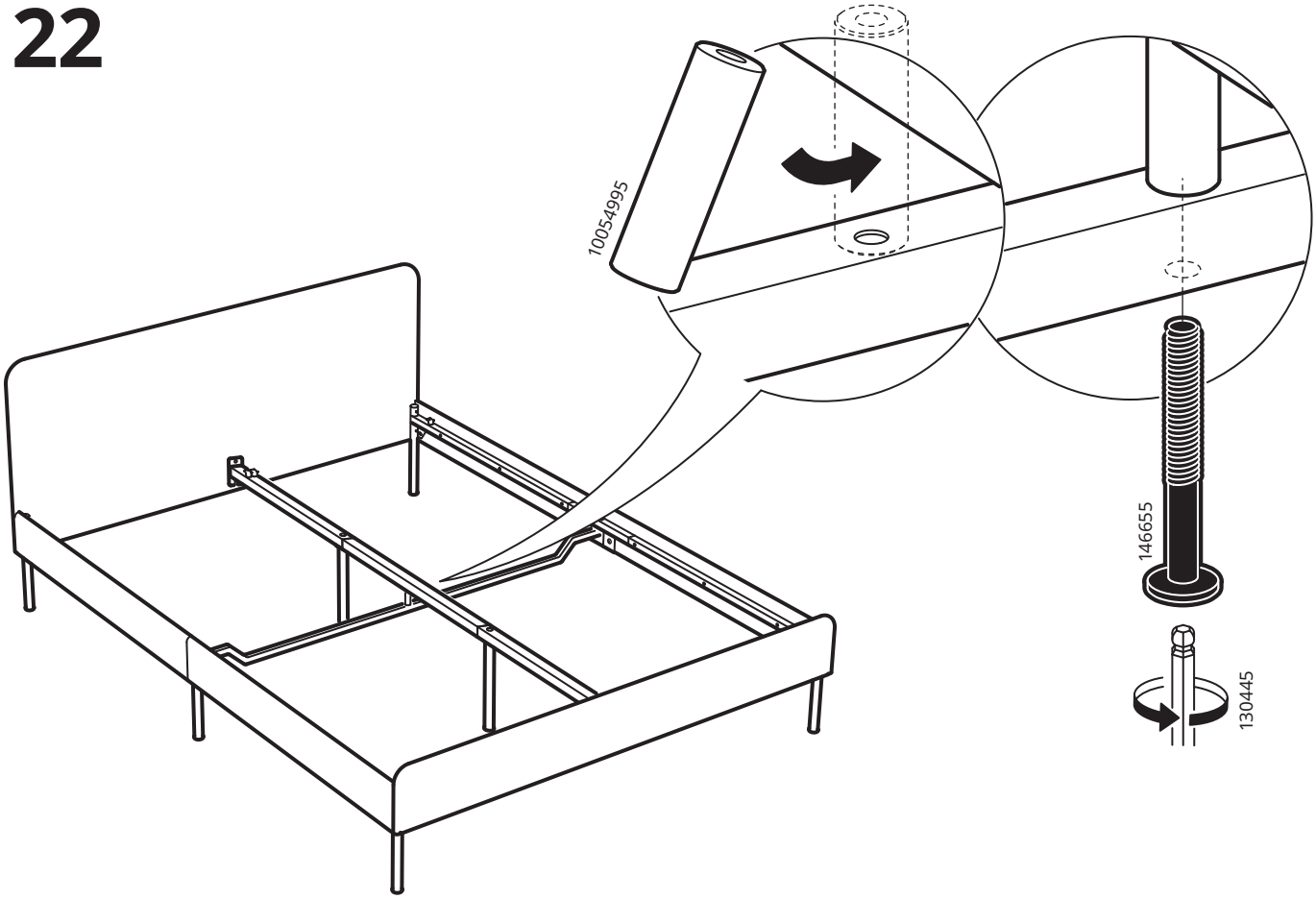

23

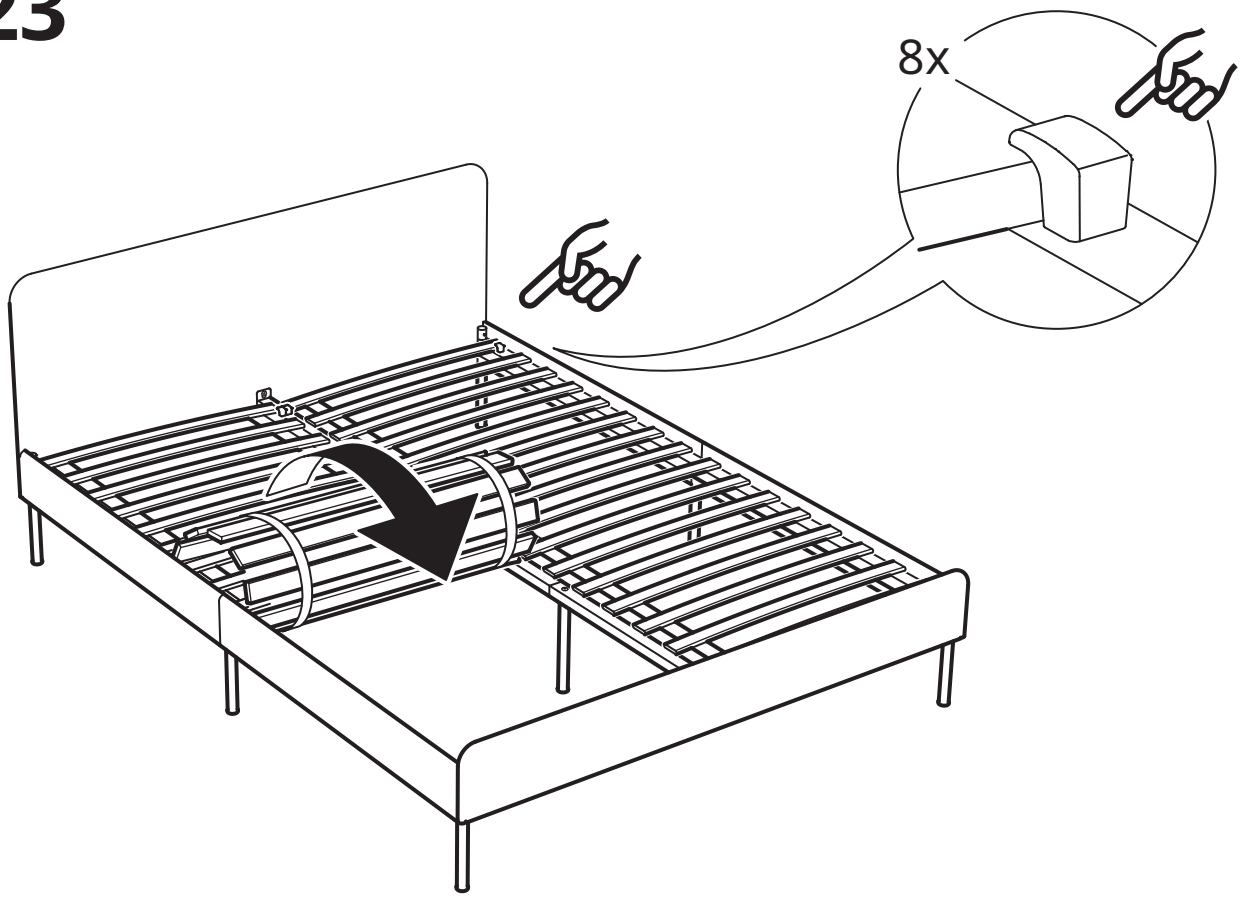

© Inter IKEA Systems B.V. 2018