VIKHAMMER

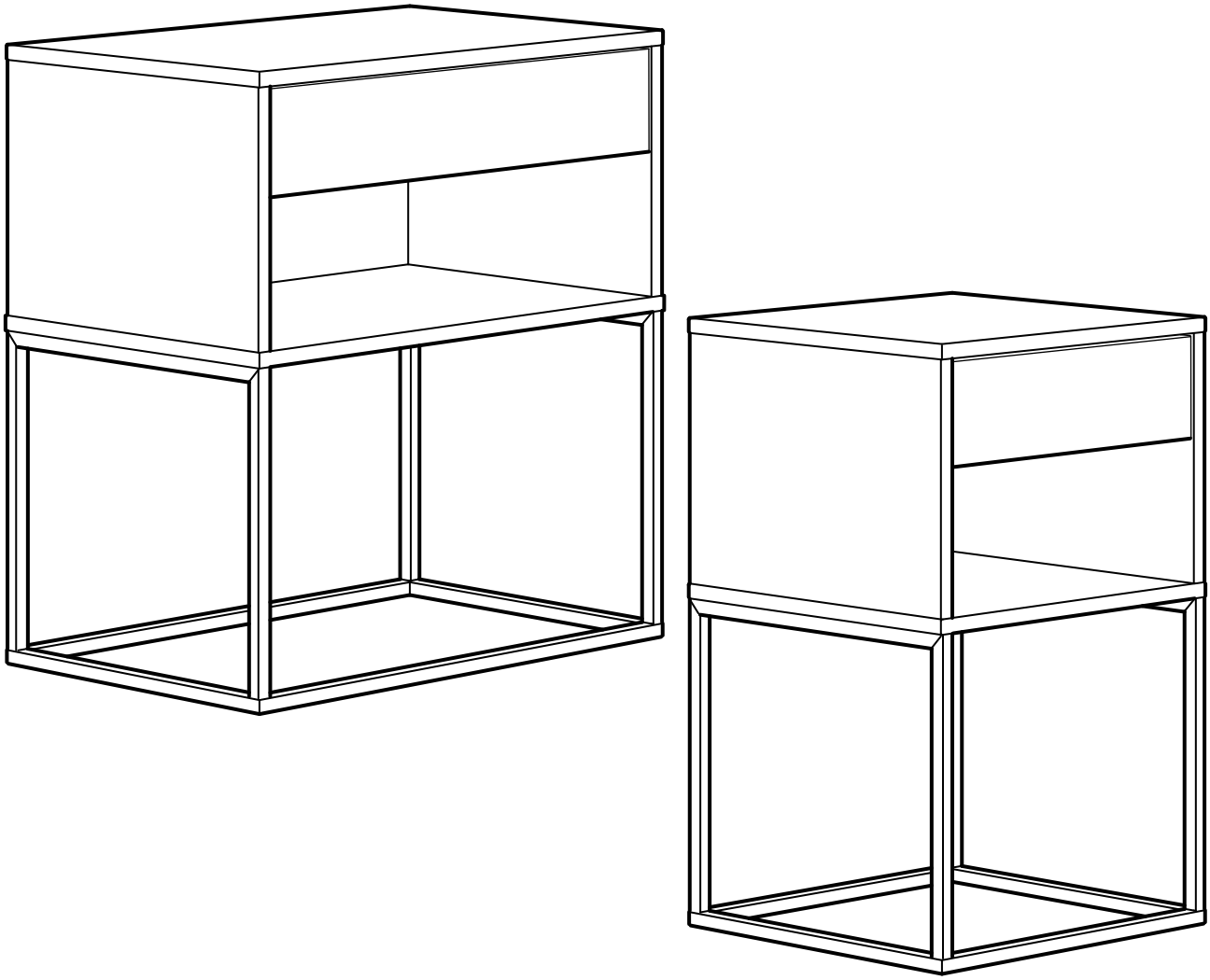

Design and Quality
IKEA of Sweden

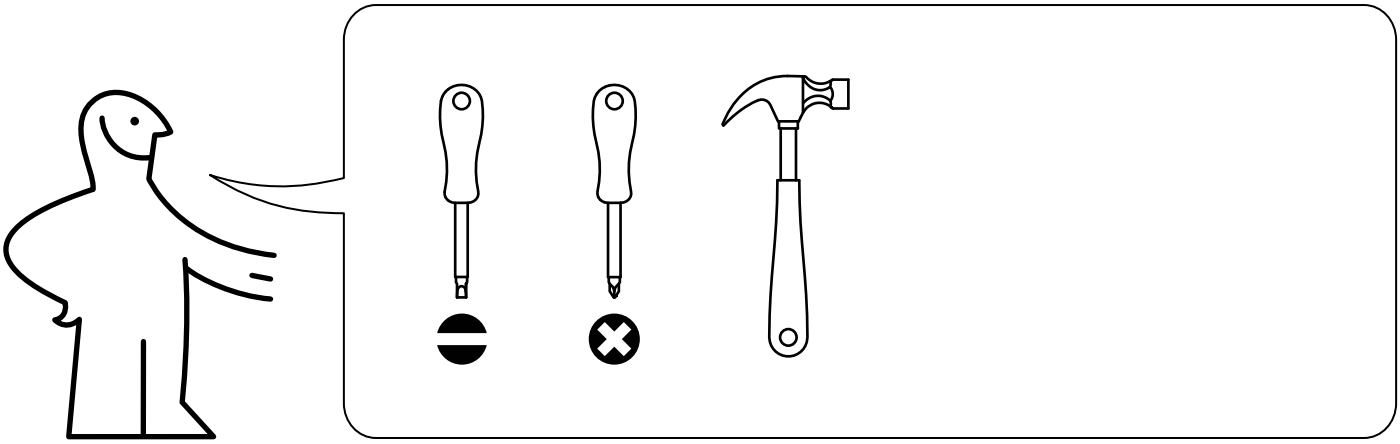

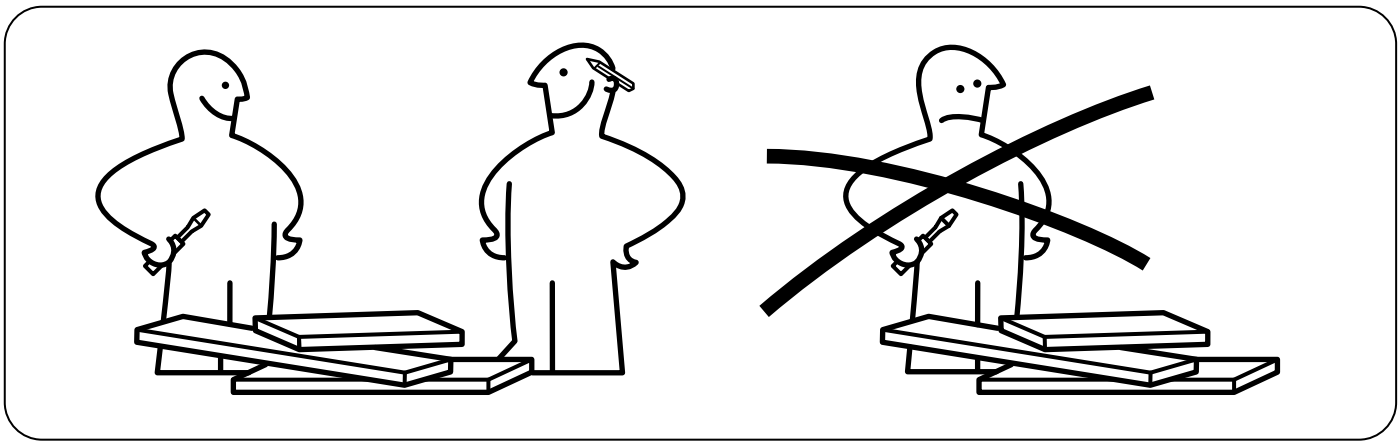

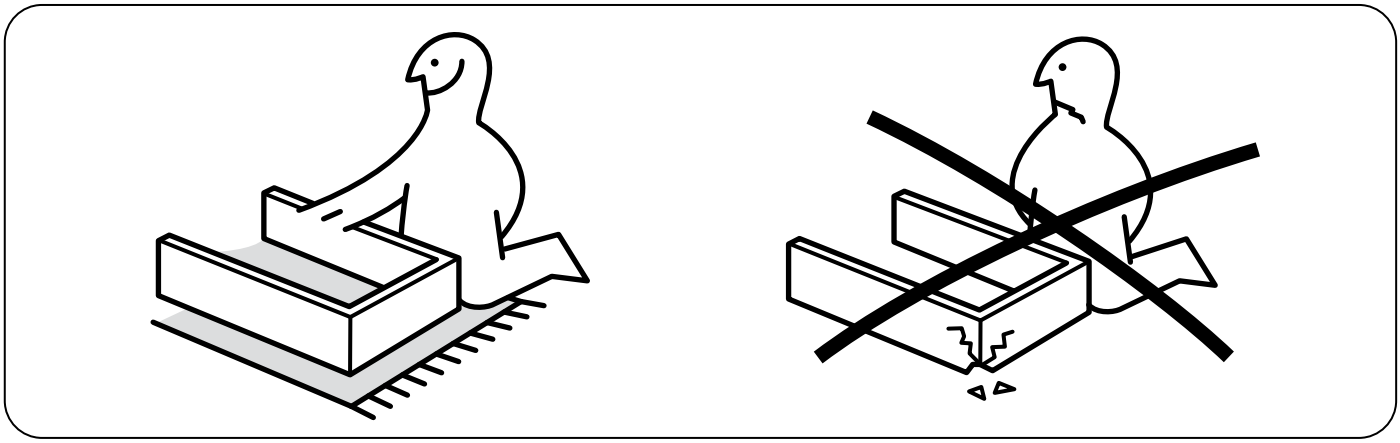

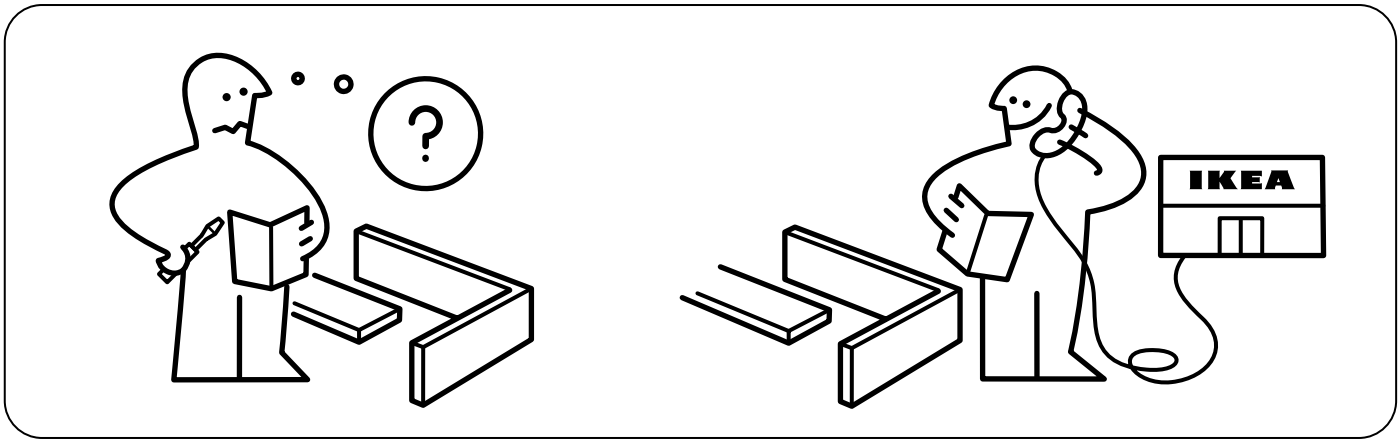

AA-2054702-3

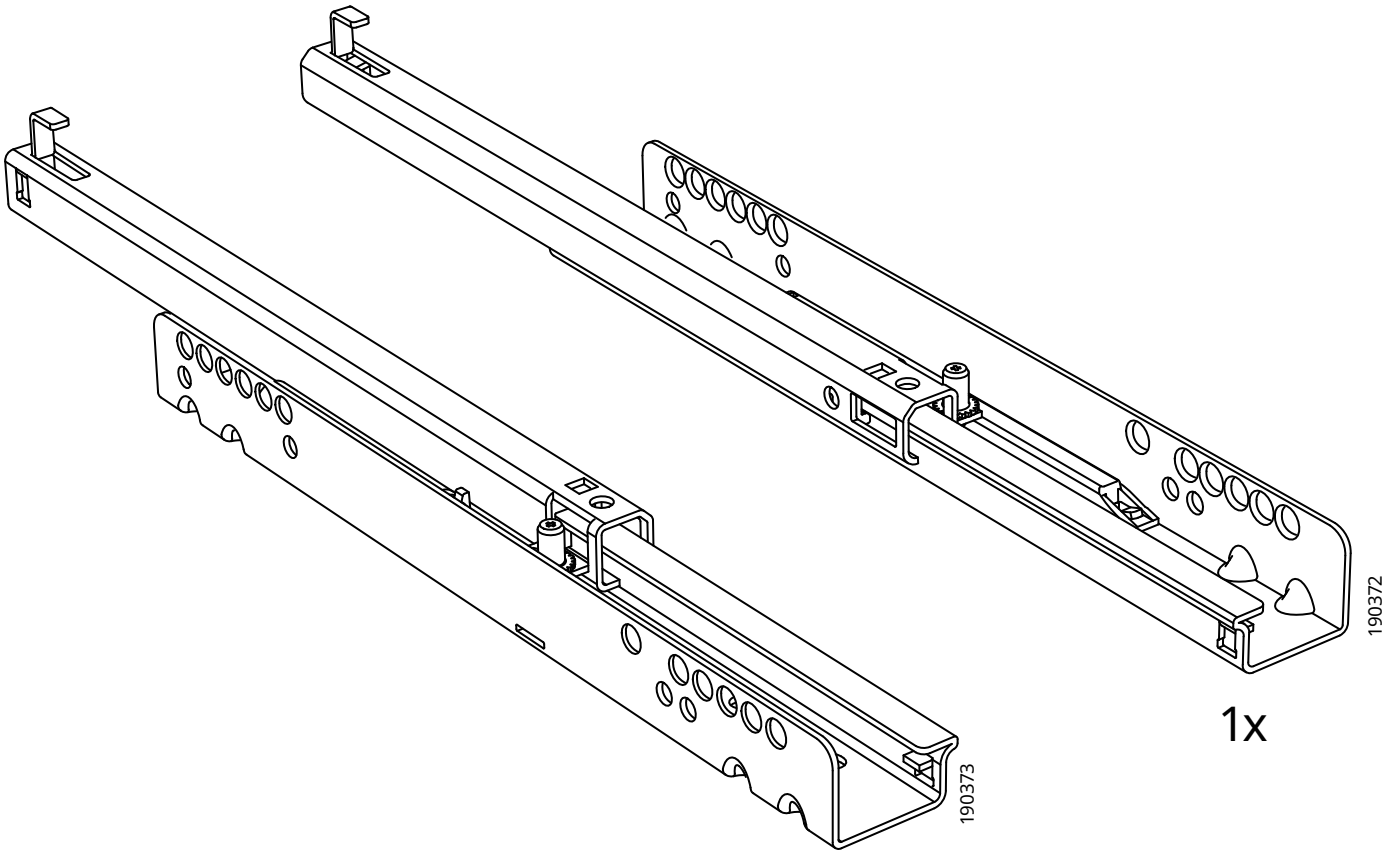

1x

1x

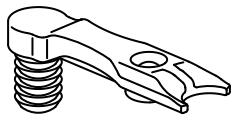

2x

4x

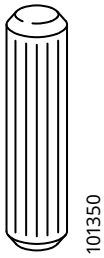

8x

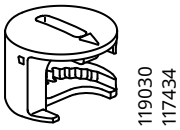

8x

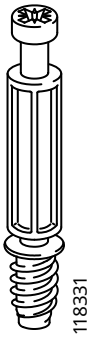

8x

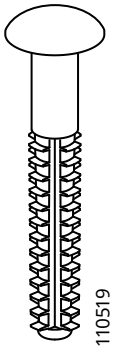

4x

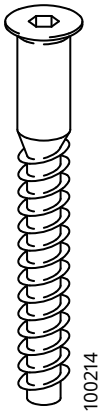

4x

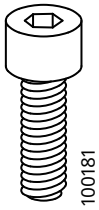

4x

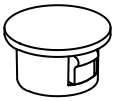

4x

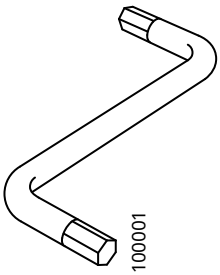

1x

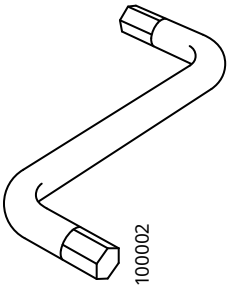

1x

1

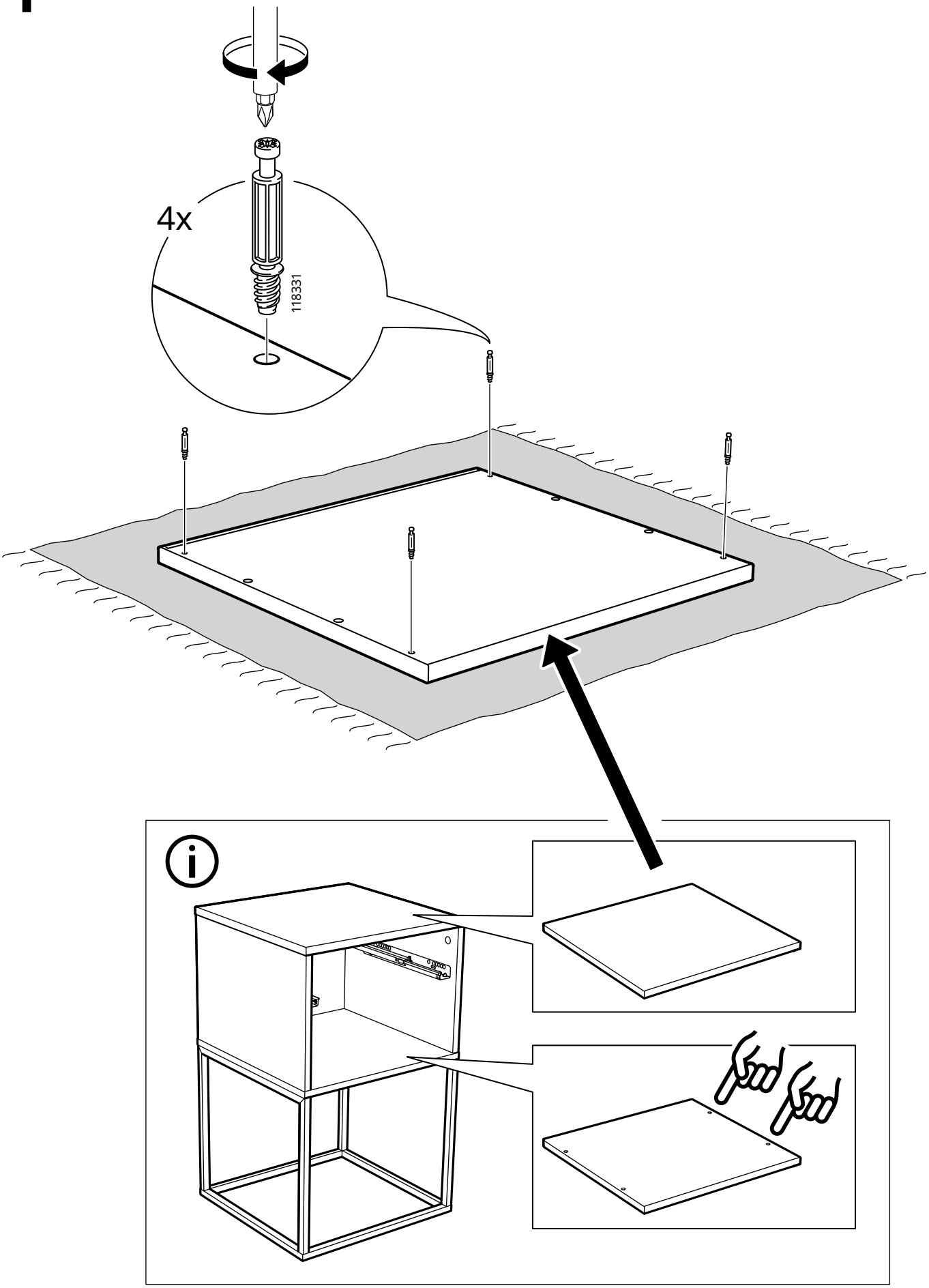

2

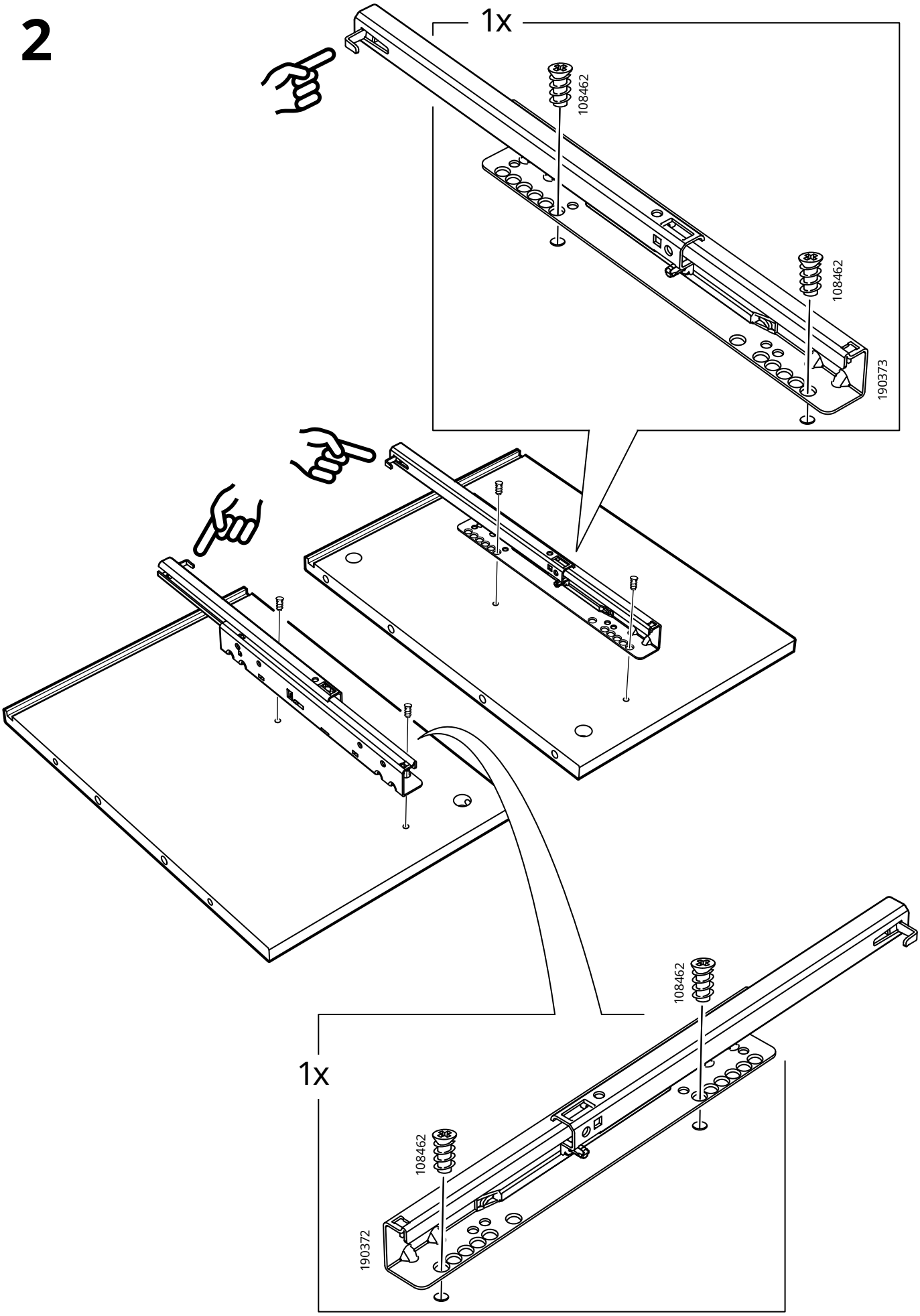

3

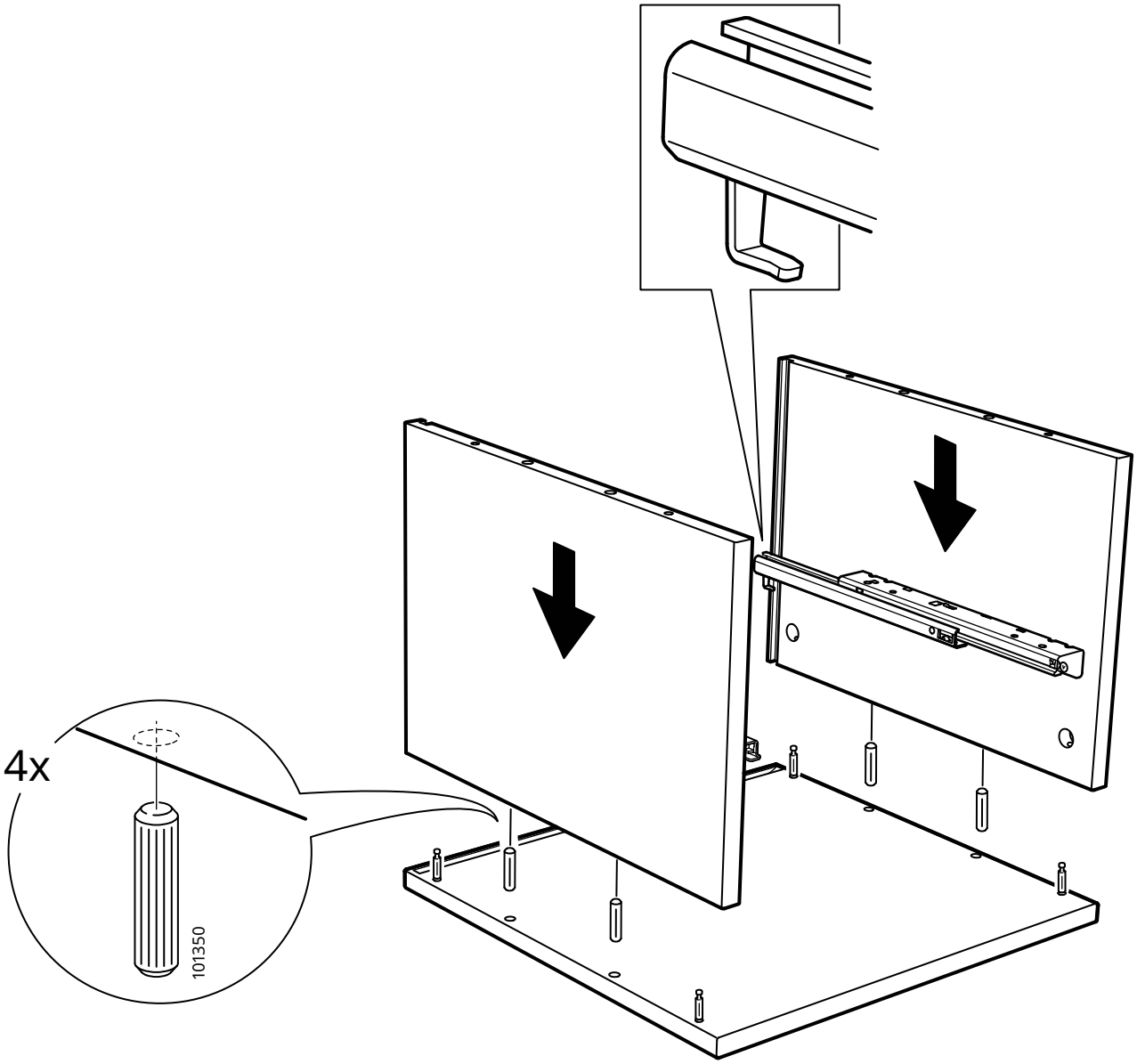

4

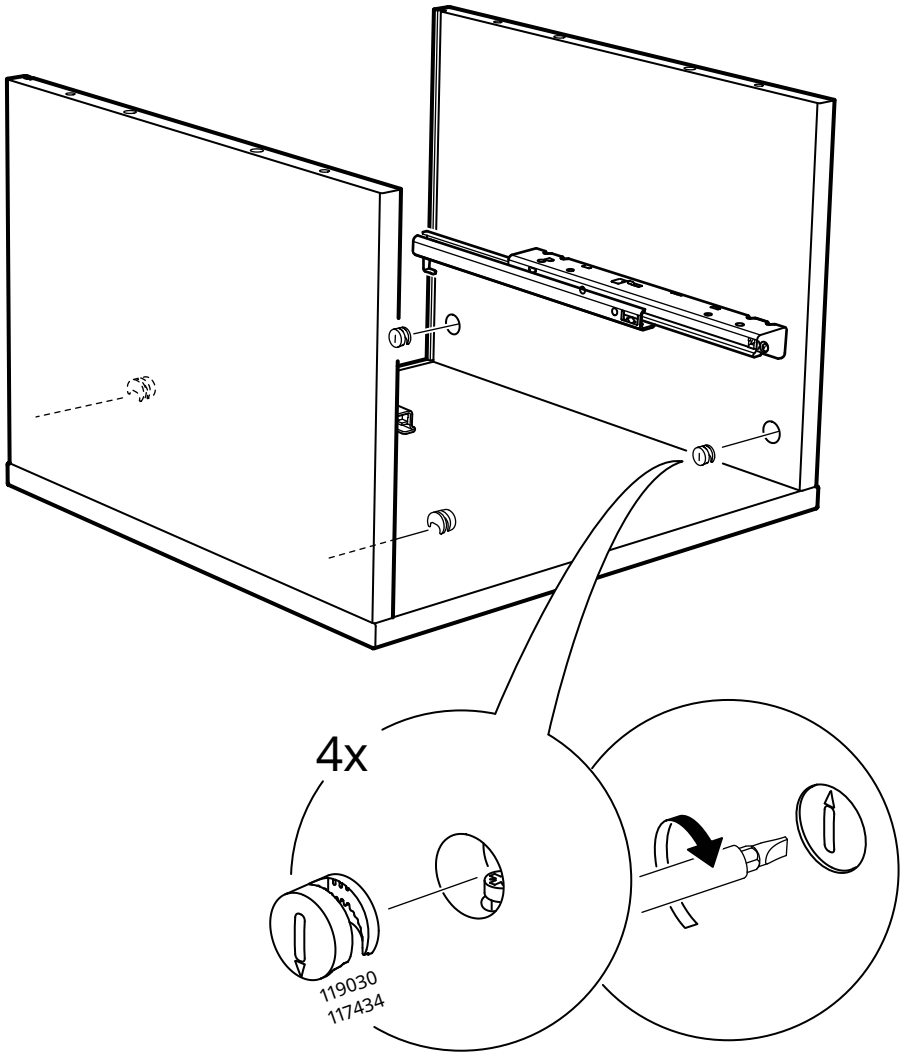

5

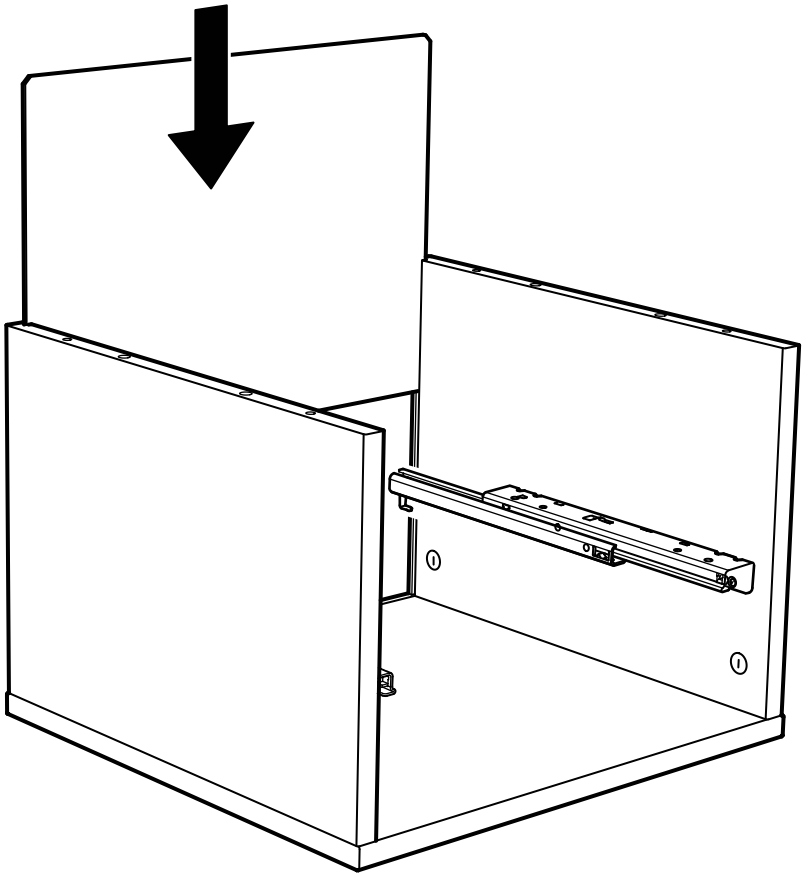

6

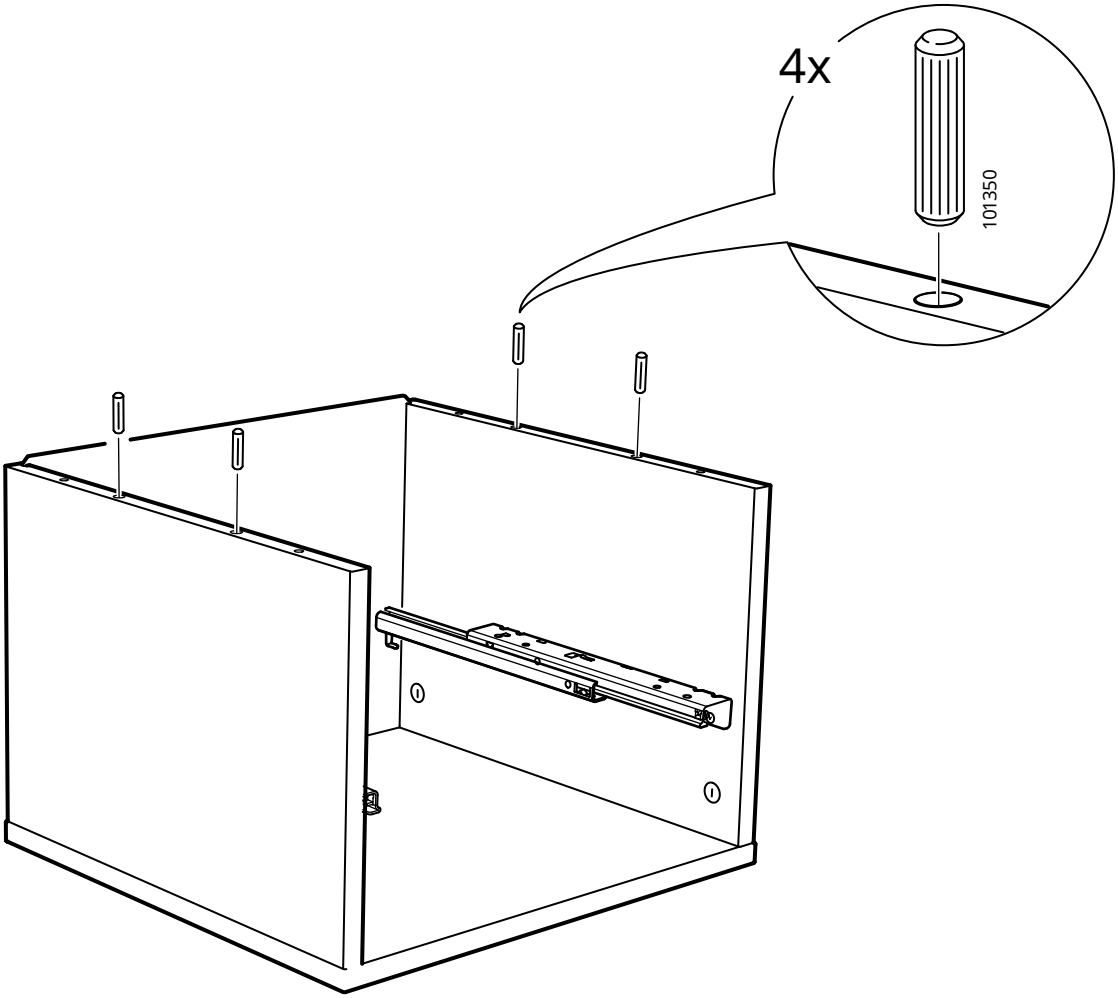

7

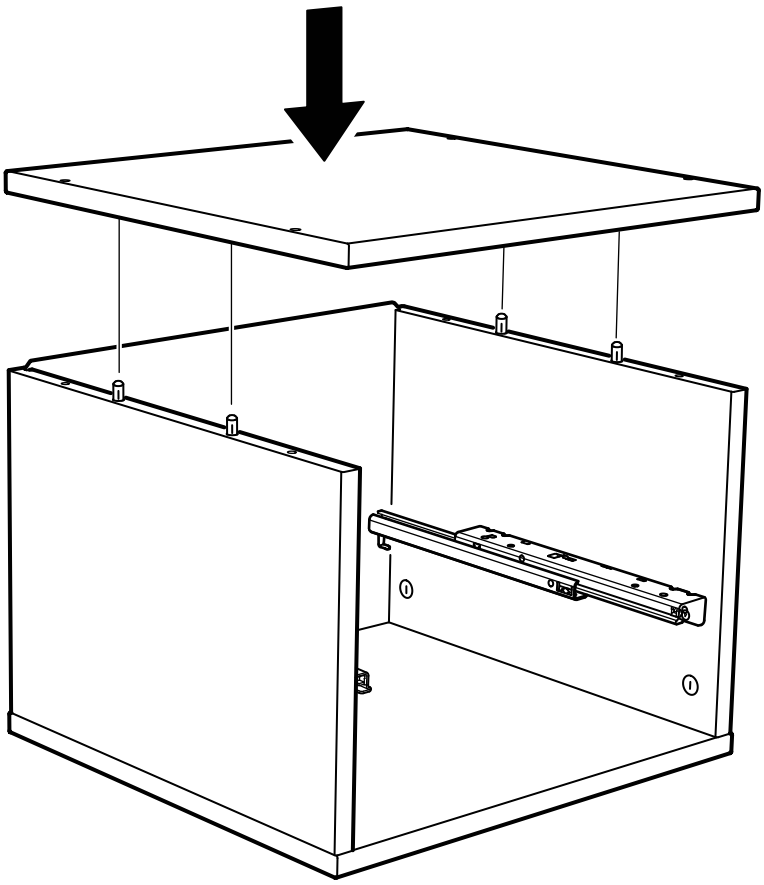

8

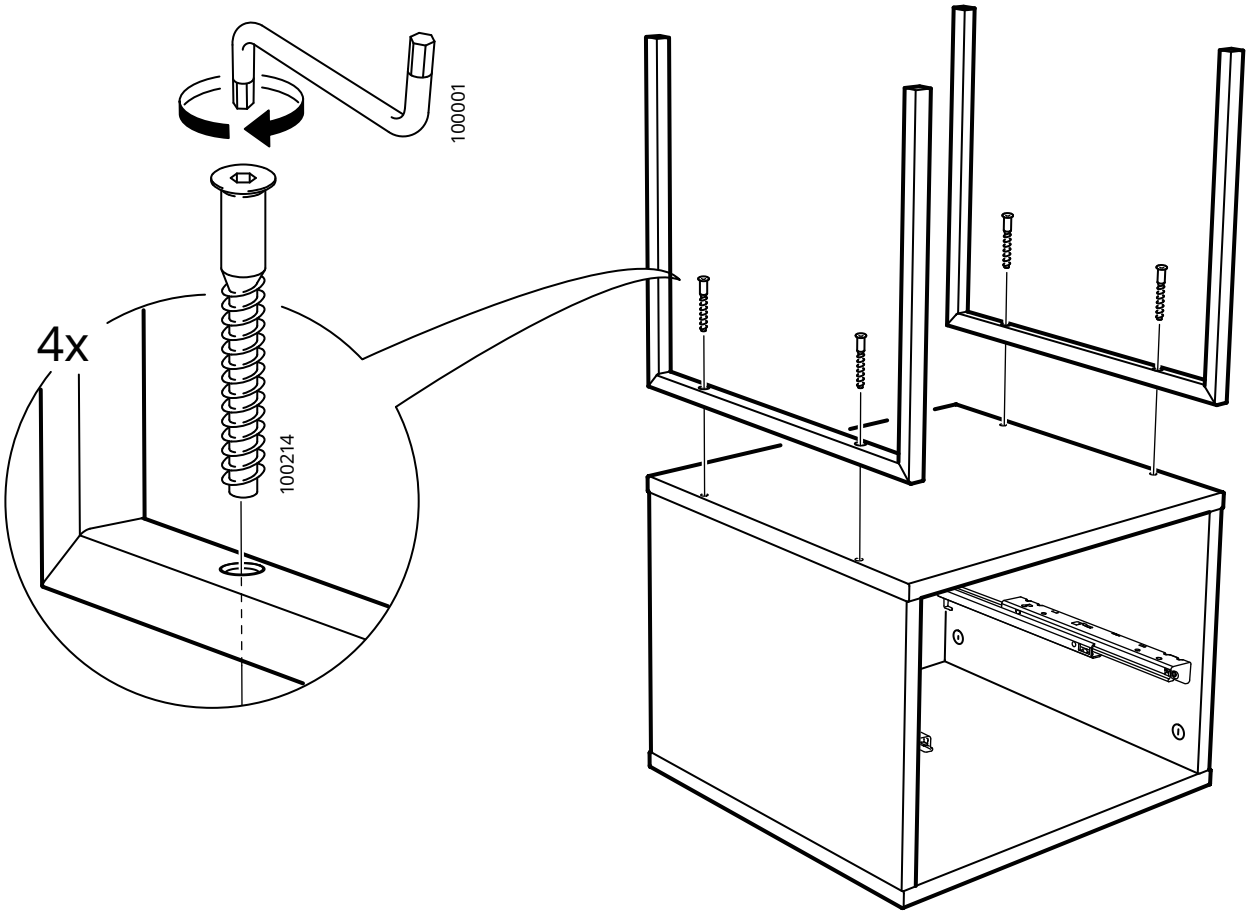

9

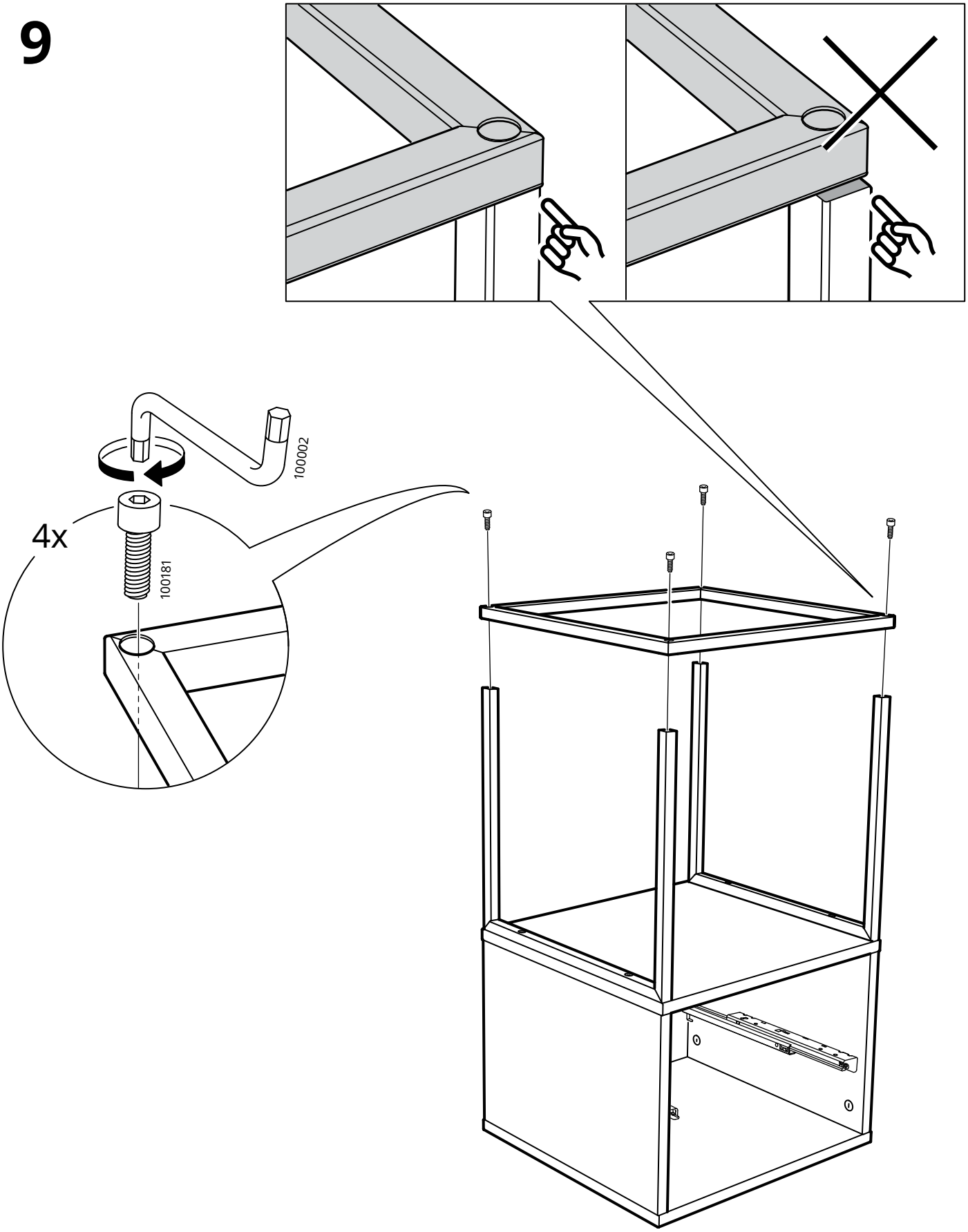

10

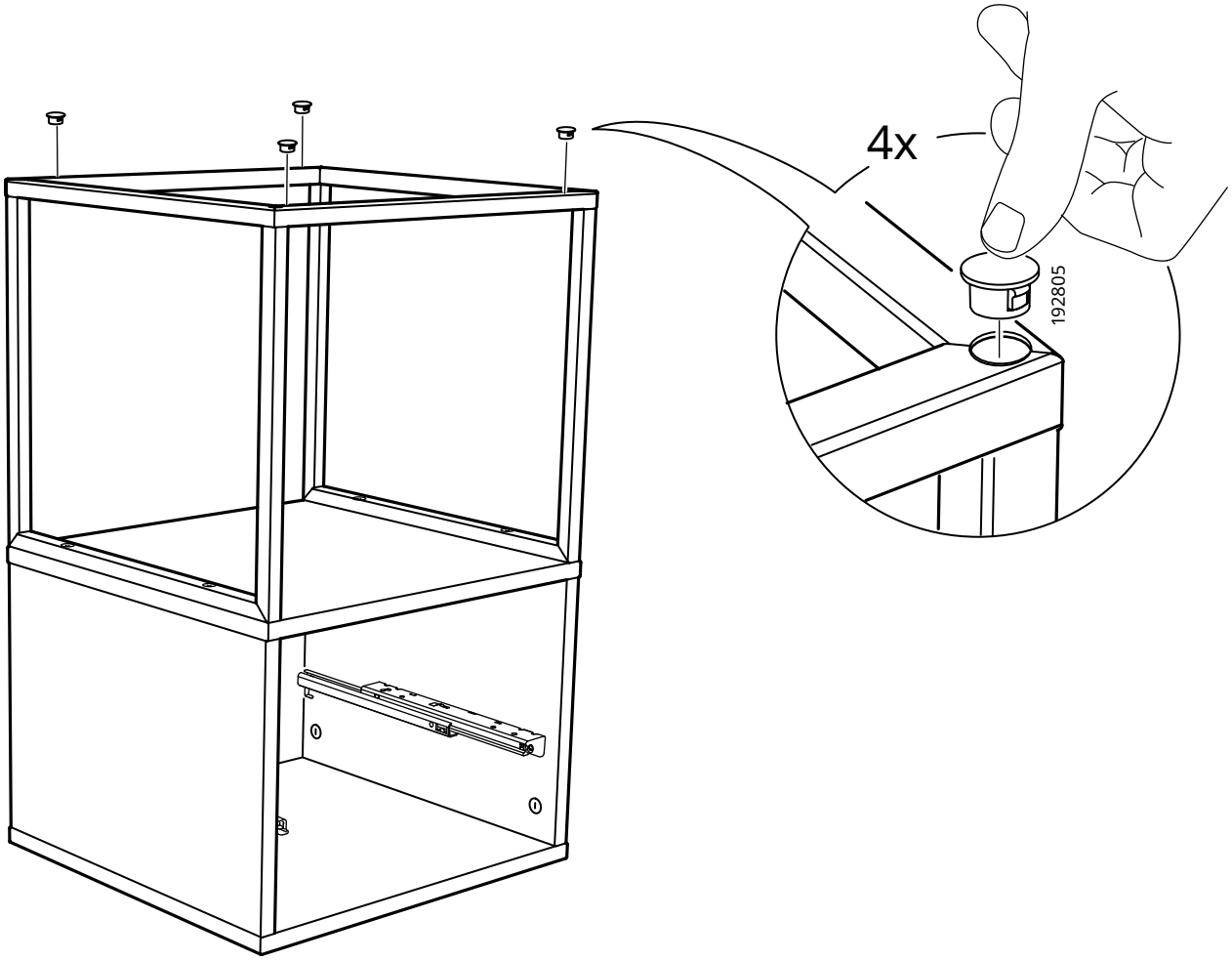

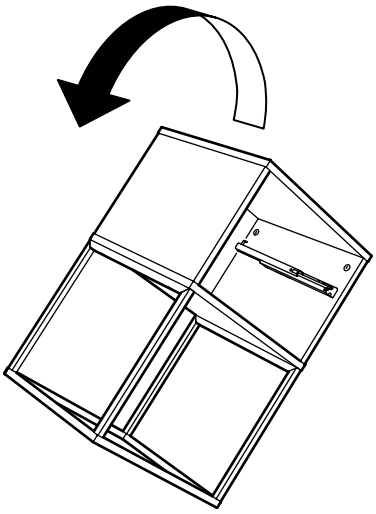

11

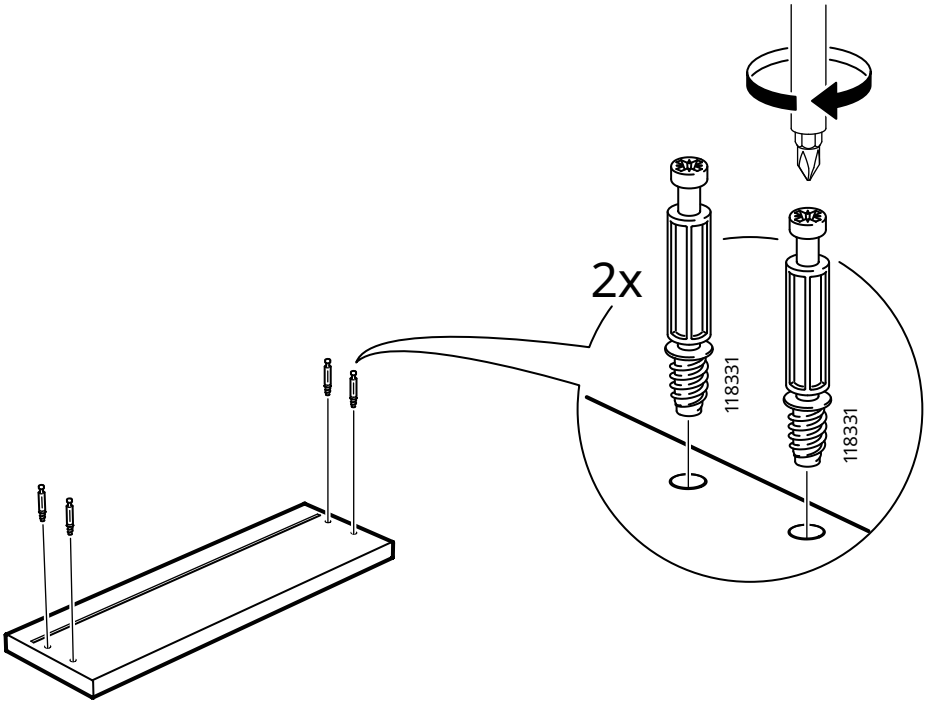

12

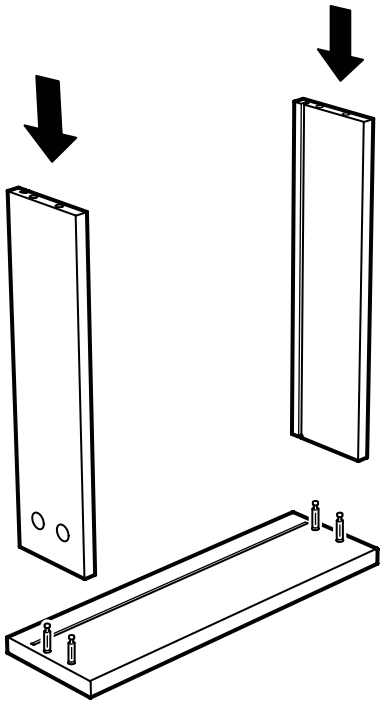

13

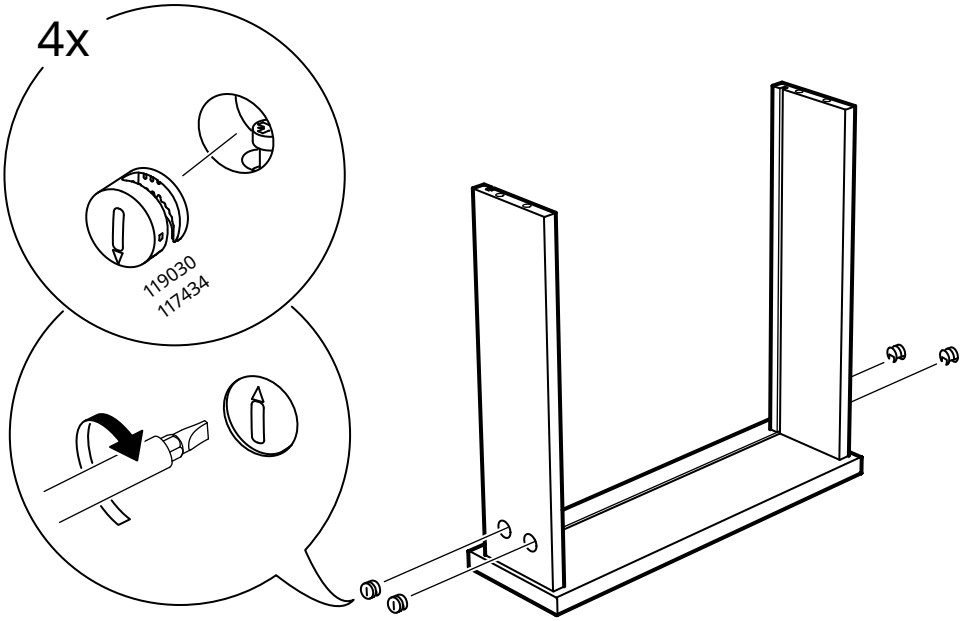

14

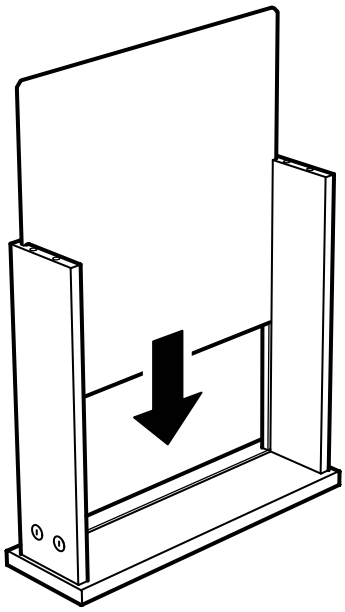

15

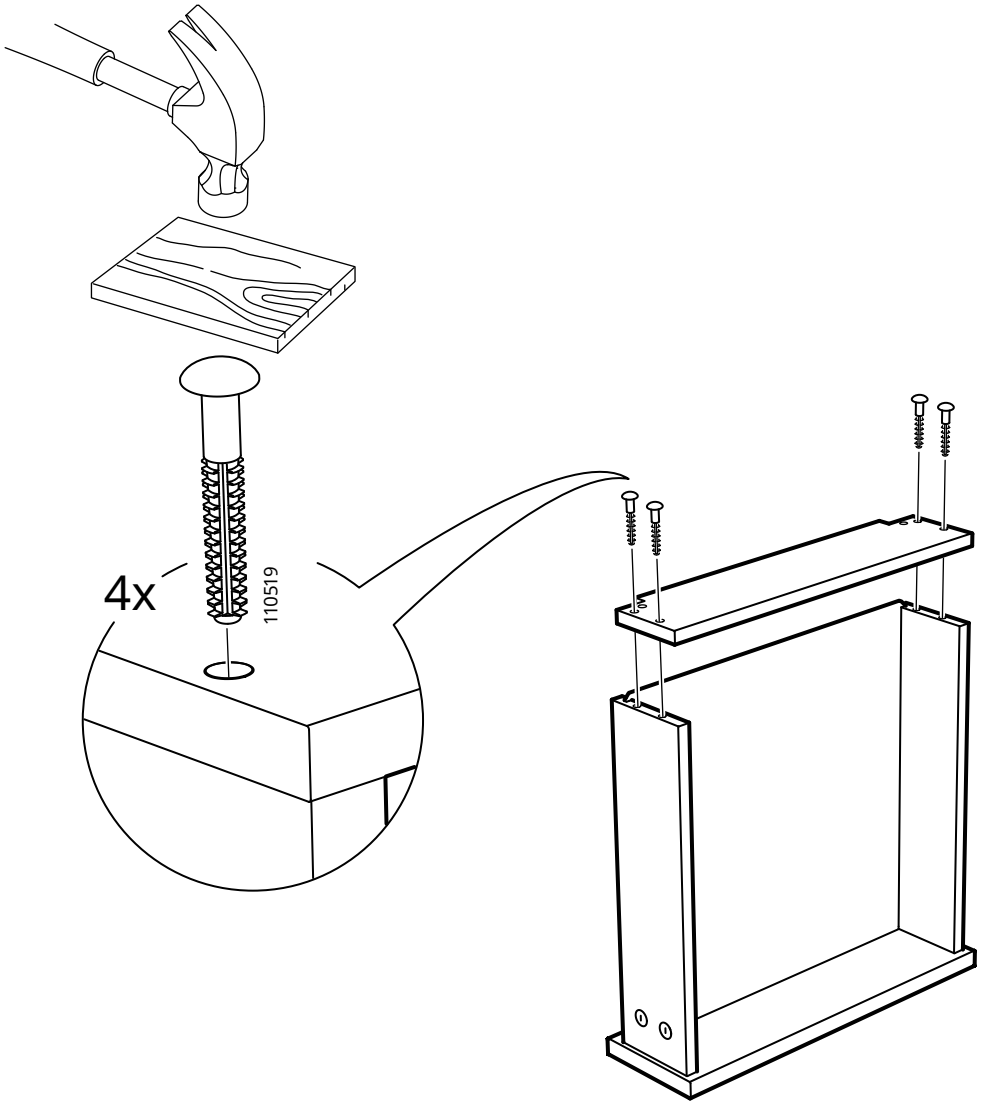

16

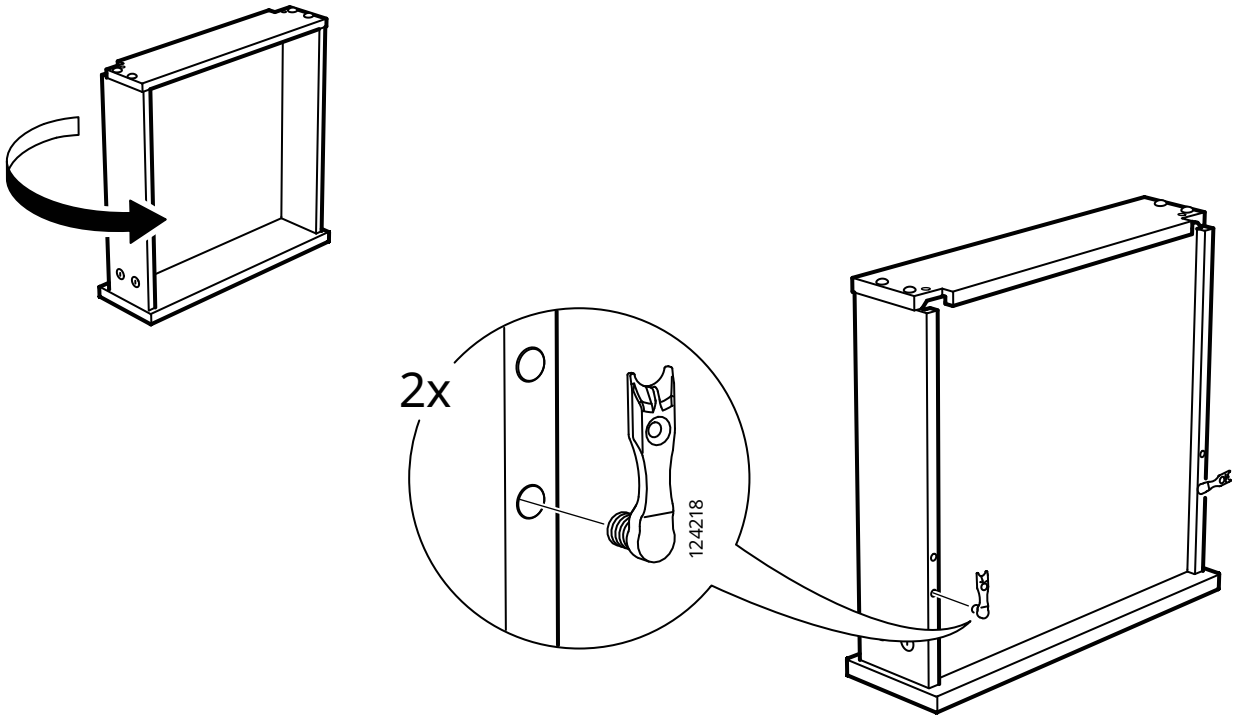

17

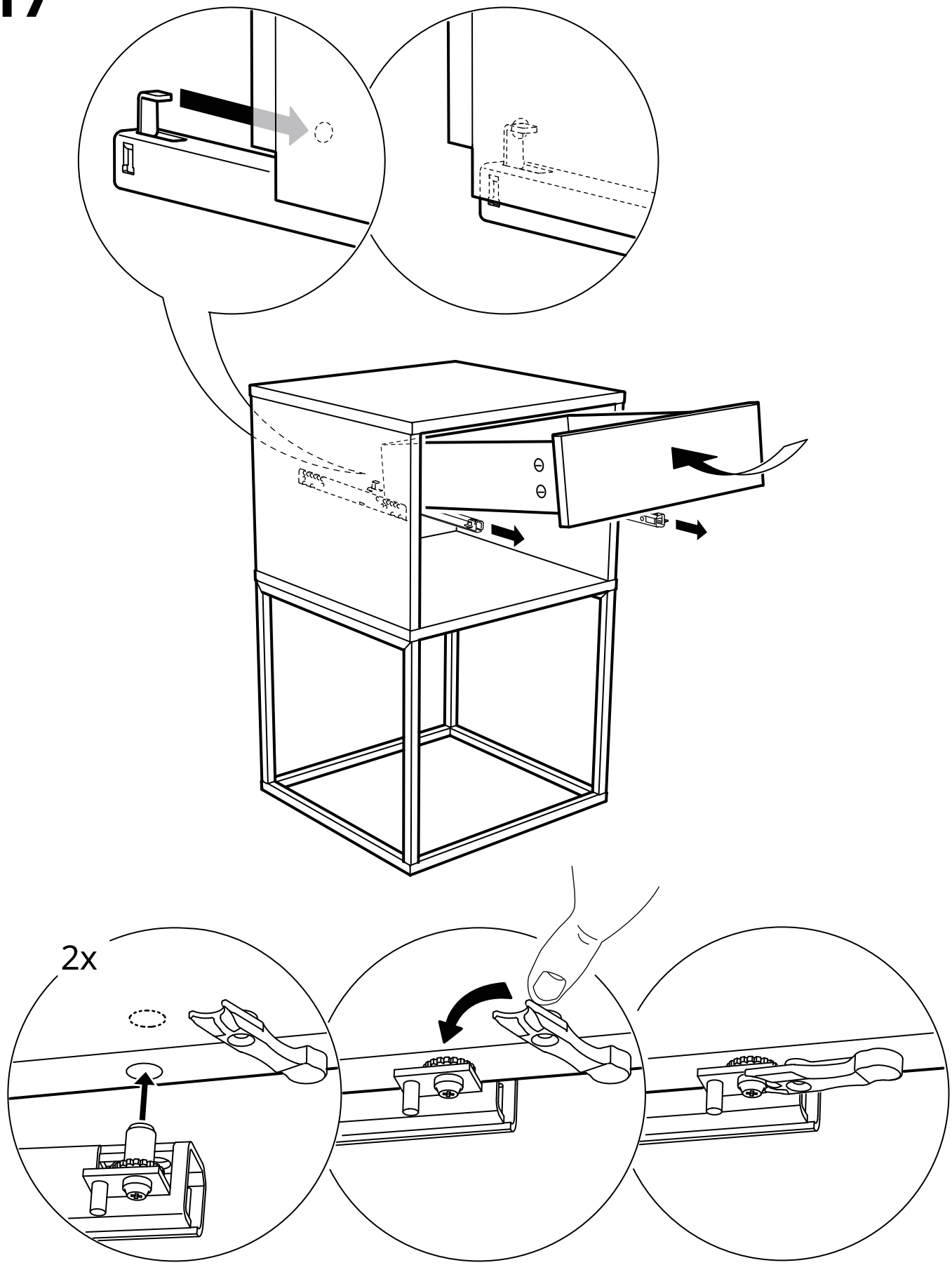

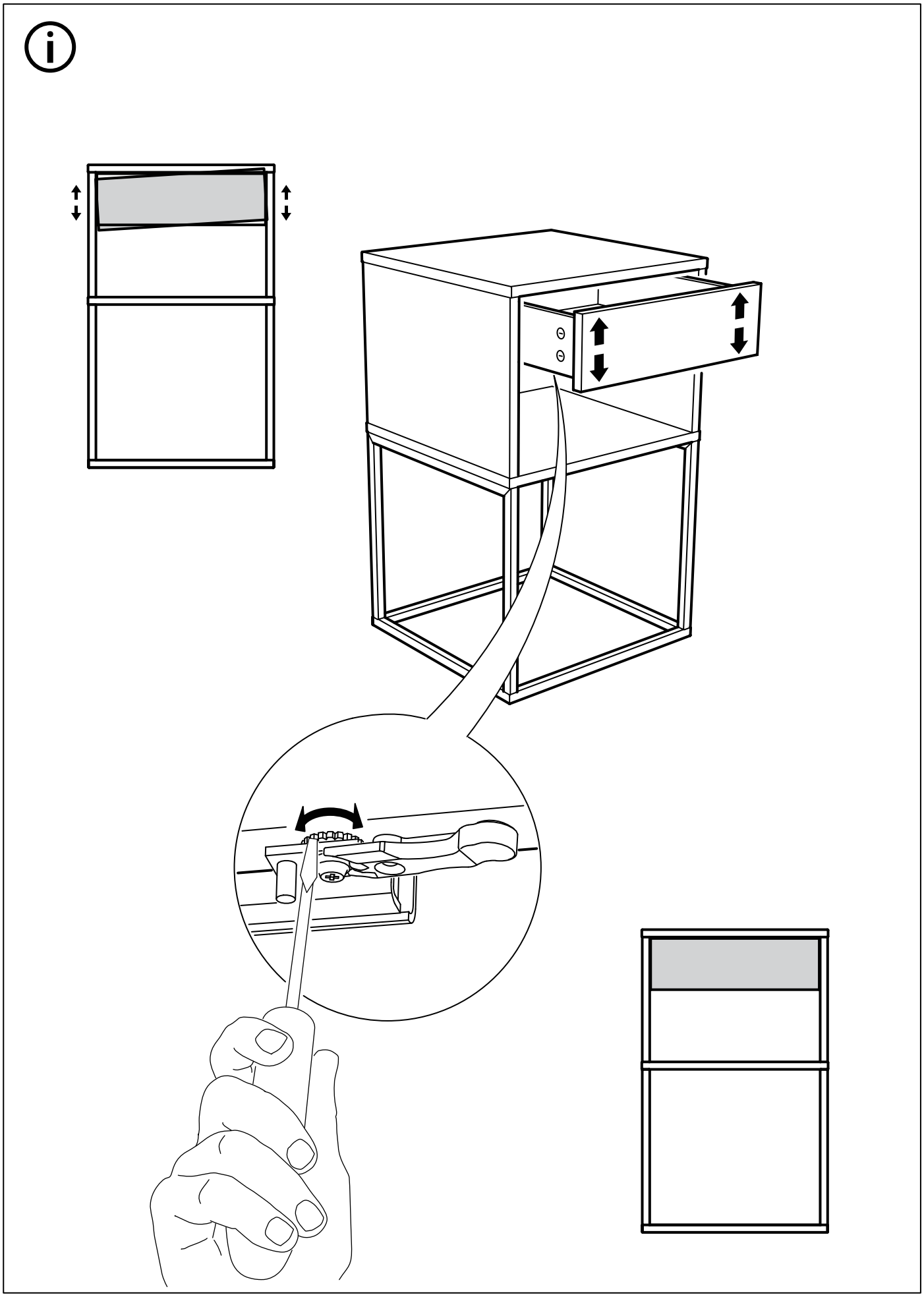

© Inter IKEA Systems B.V. 2017 2023-02-24 AA-2054702-3