ÄPPLARYD

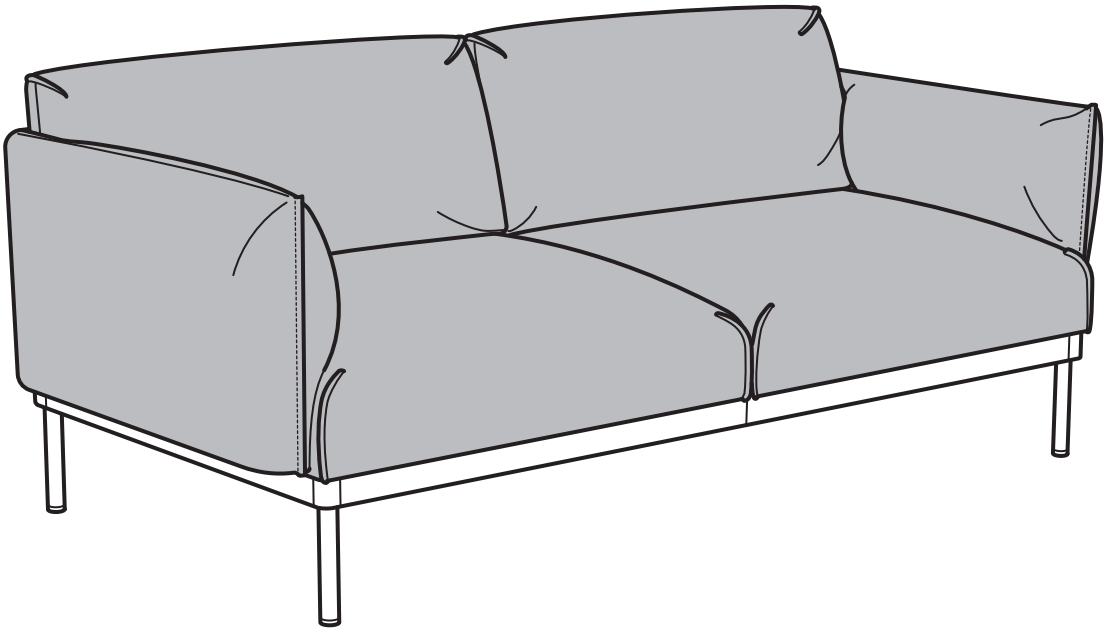

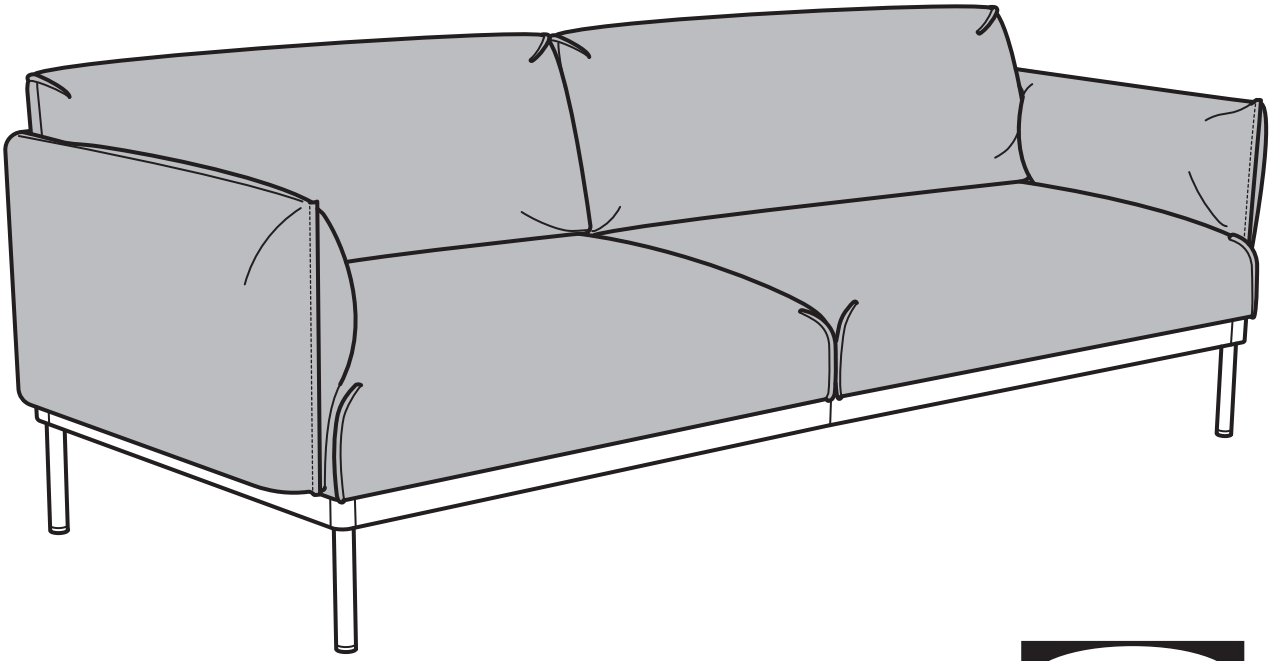

Design and Quality
IKEA of Sweden

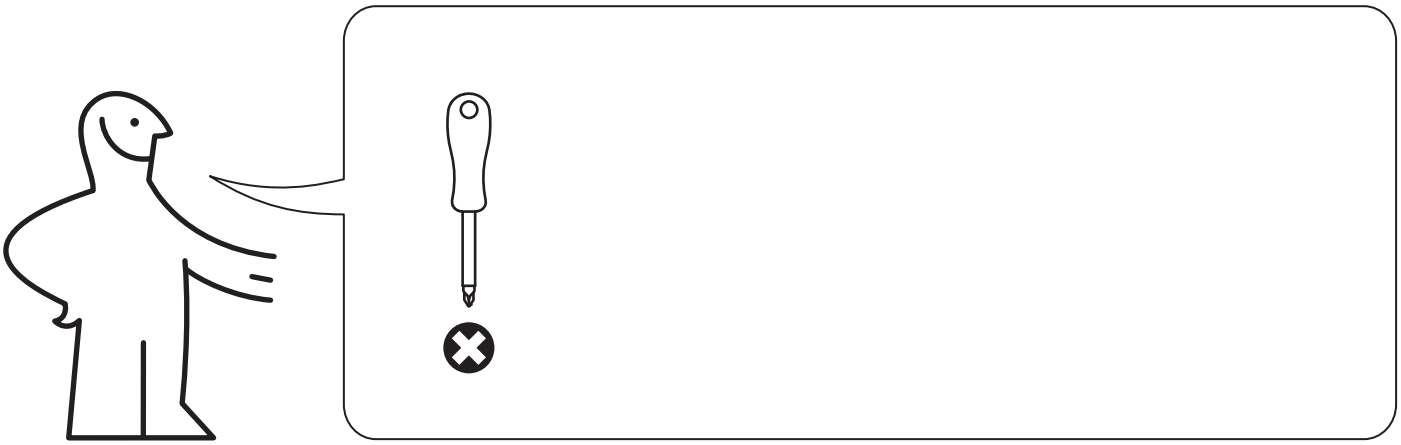

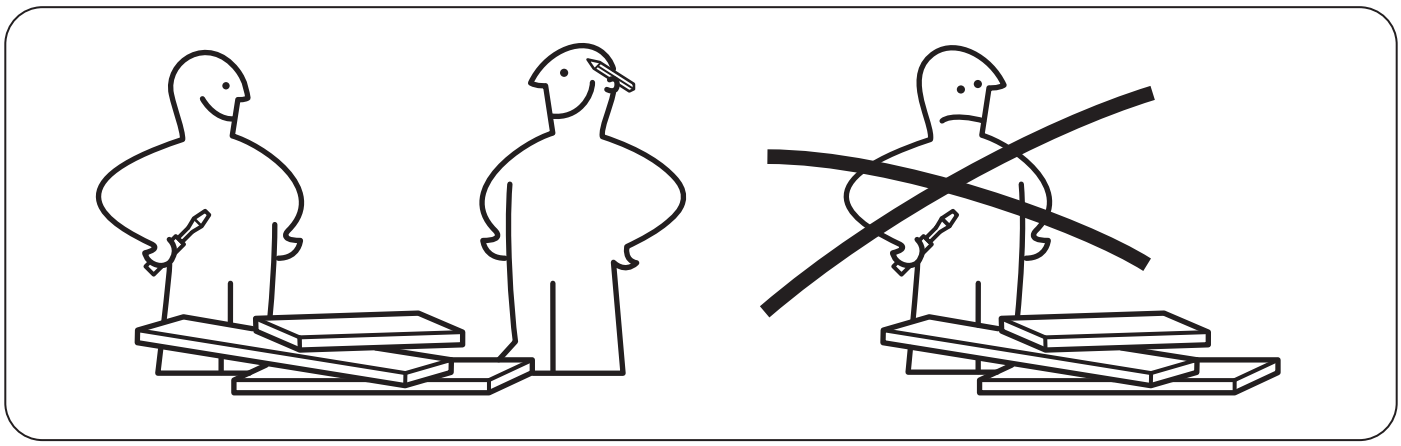

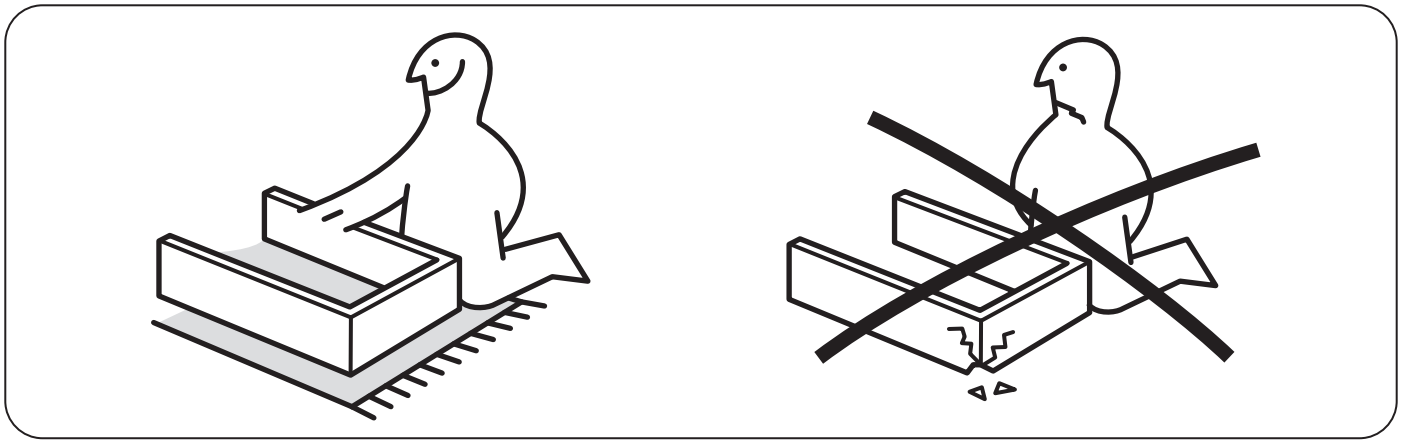

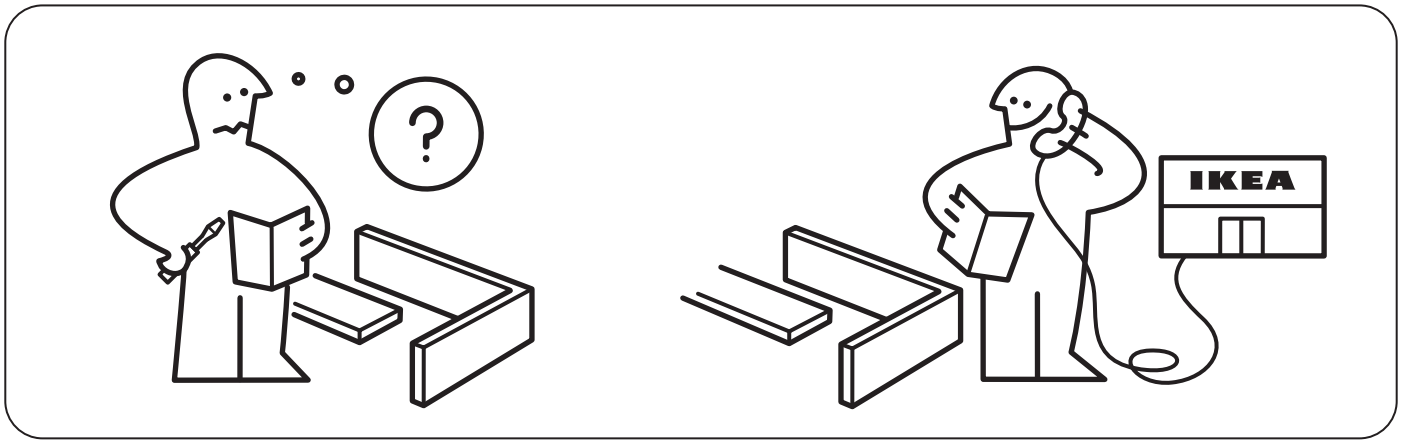
?
IKEA

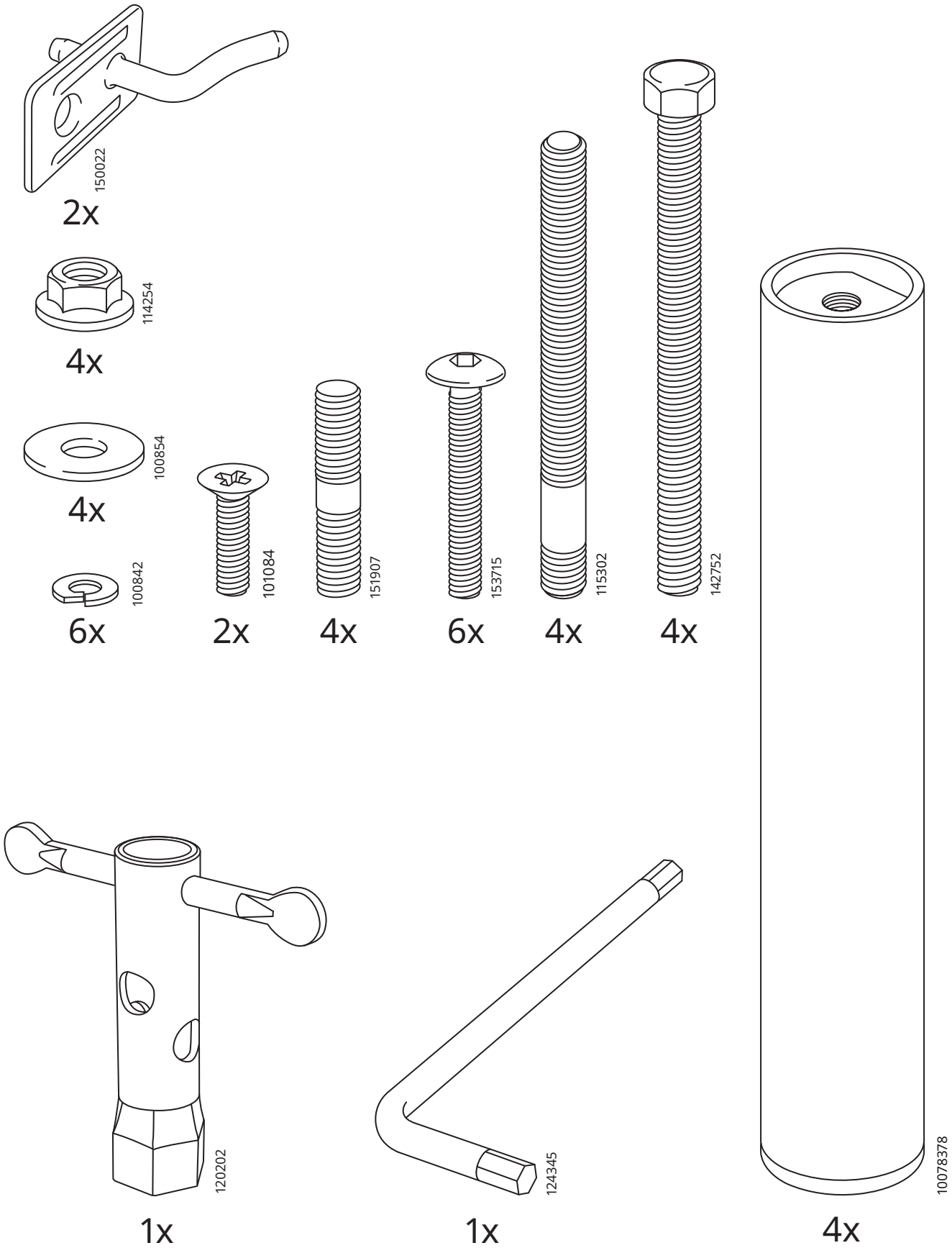
150022
2x
114254
4x
100854
4x
100842
6x
101084
2x
151907
4x
153715
6x
115302
4x
142752
4x
120202
1x
124345
1x
10078378
4x

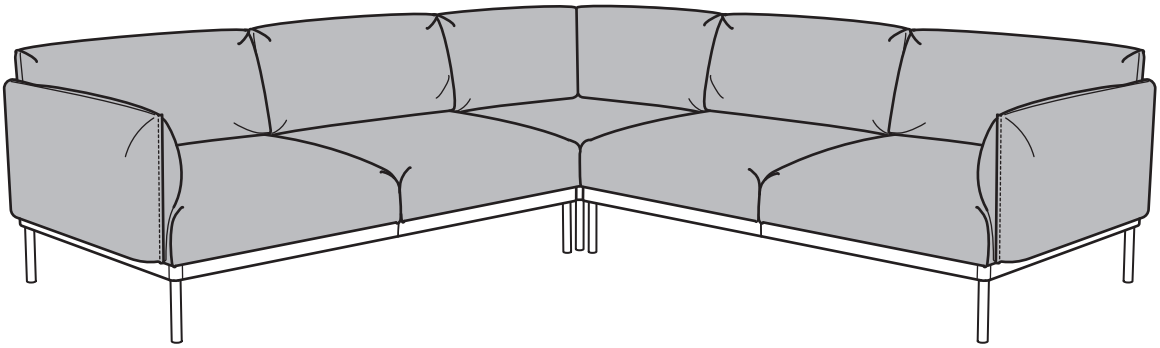

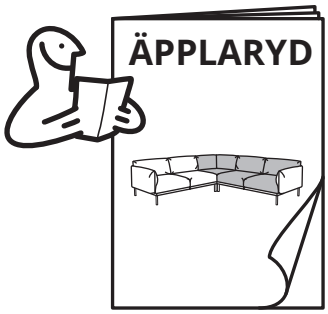
ÄPPLARYD

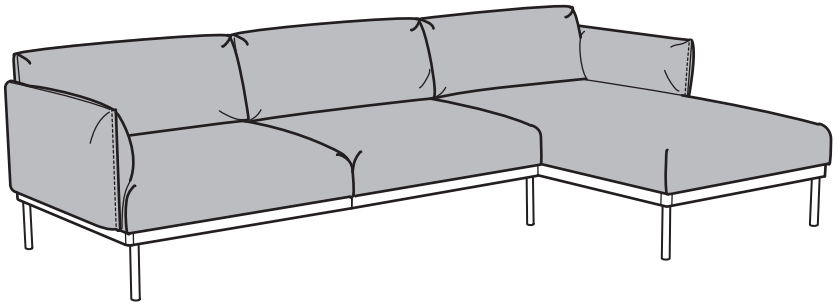

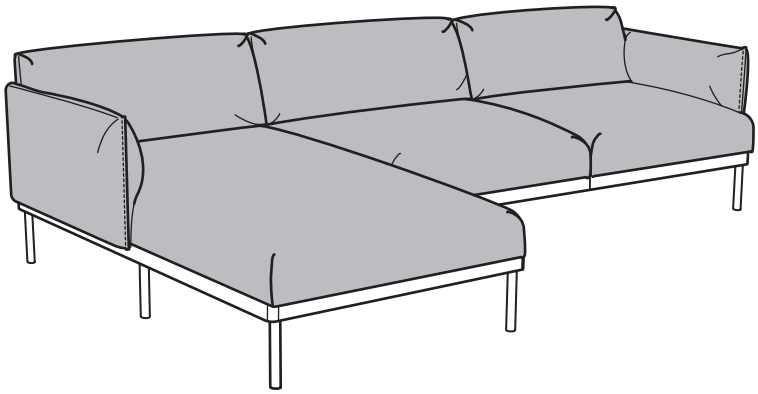

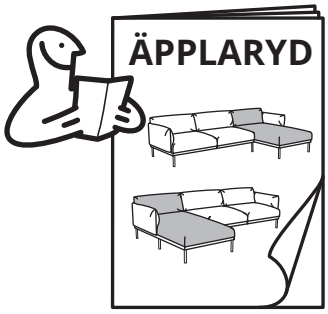
ÄPPLARYD

1

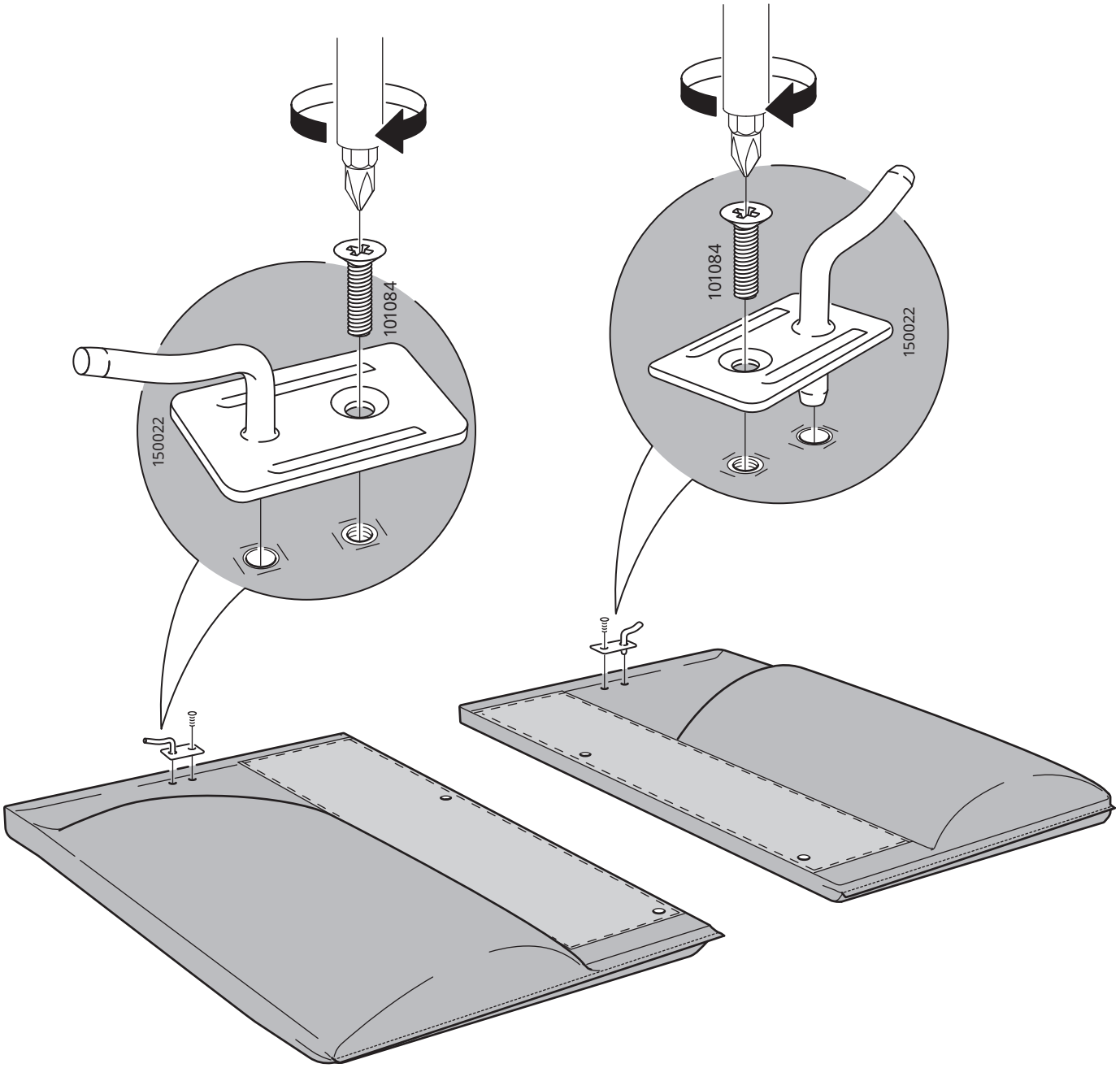

2

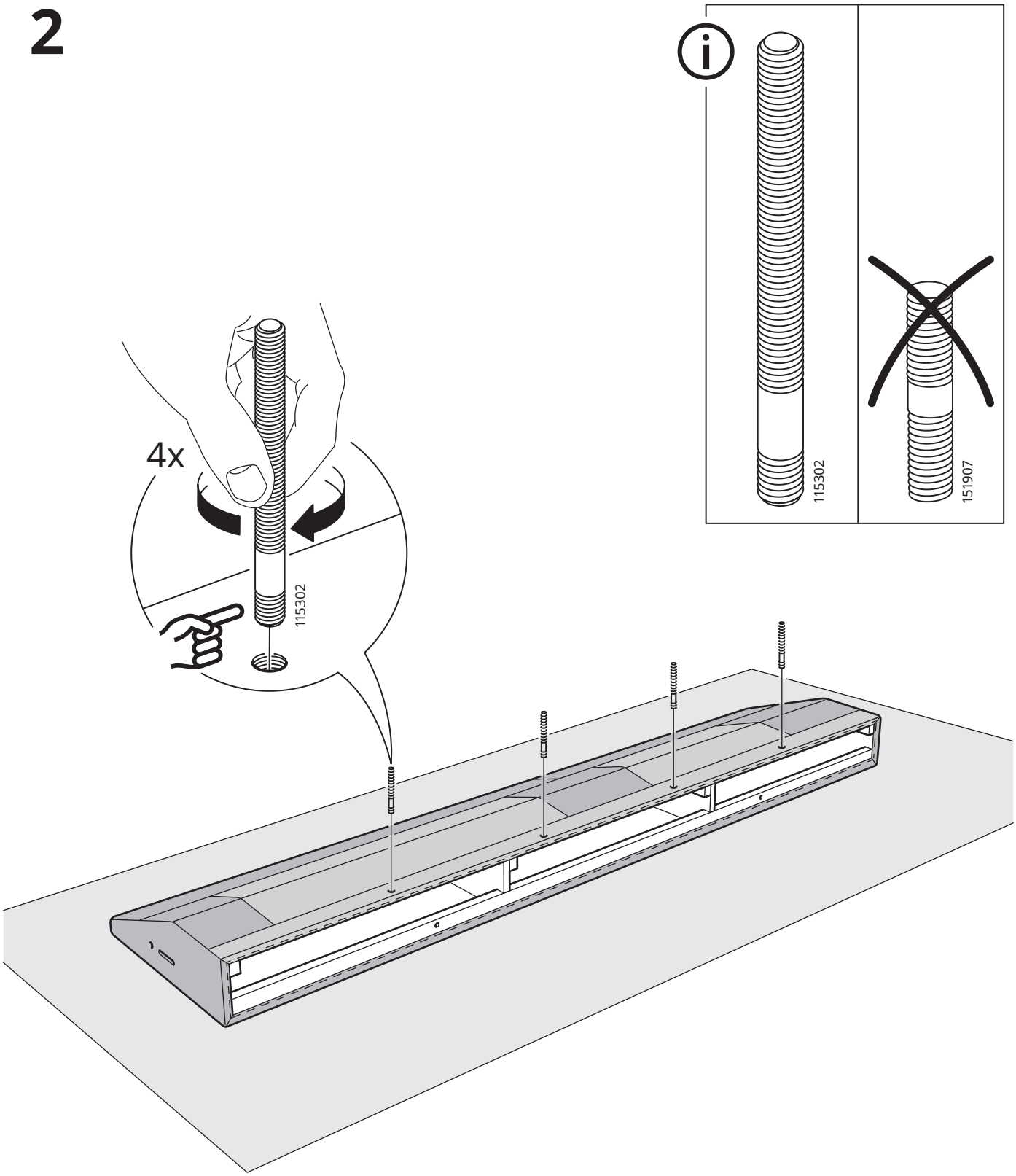

3

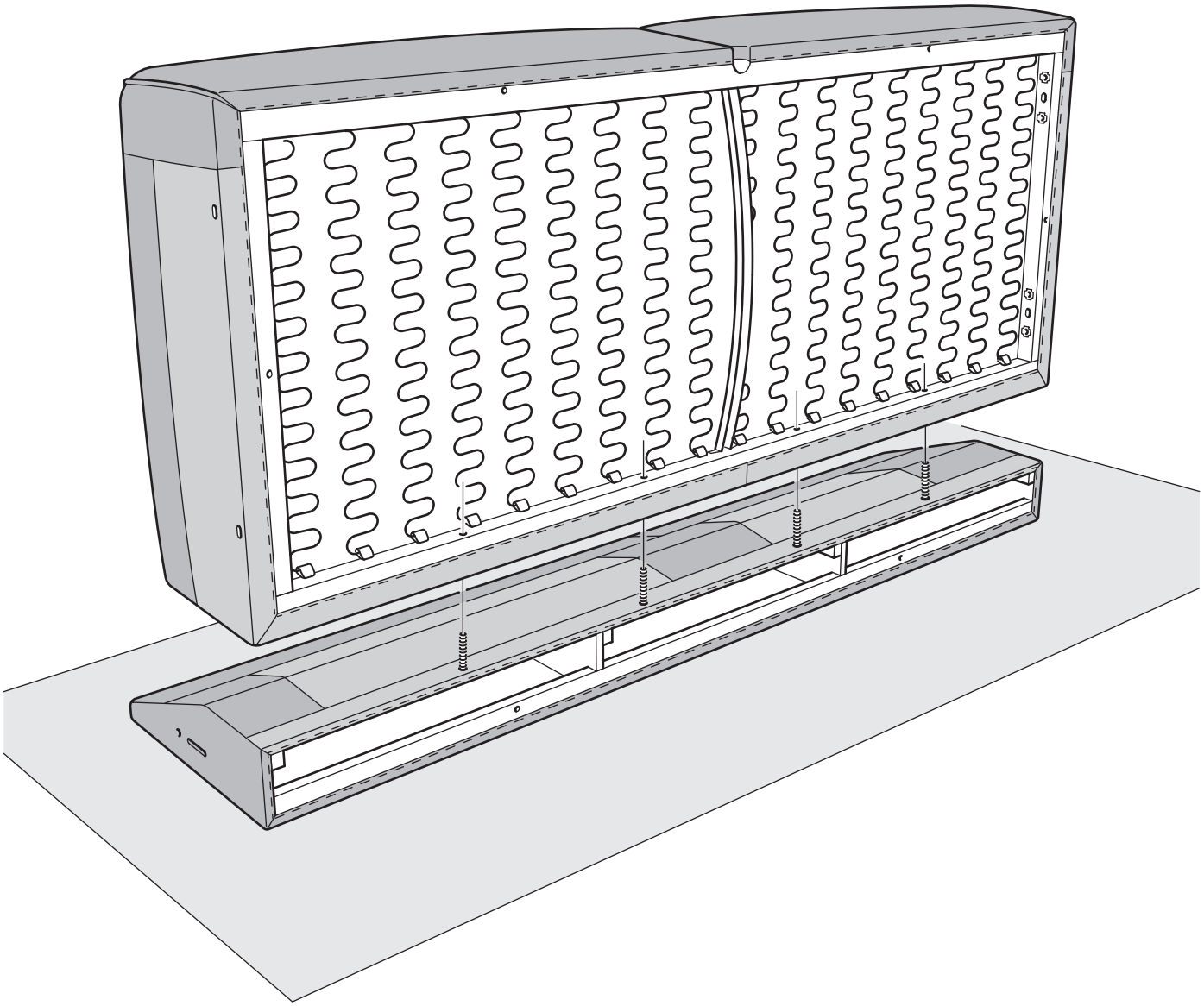

4

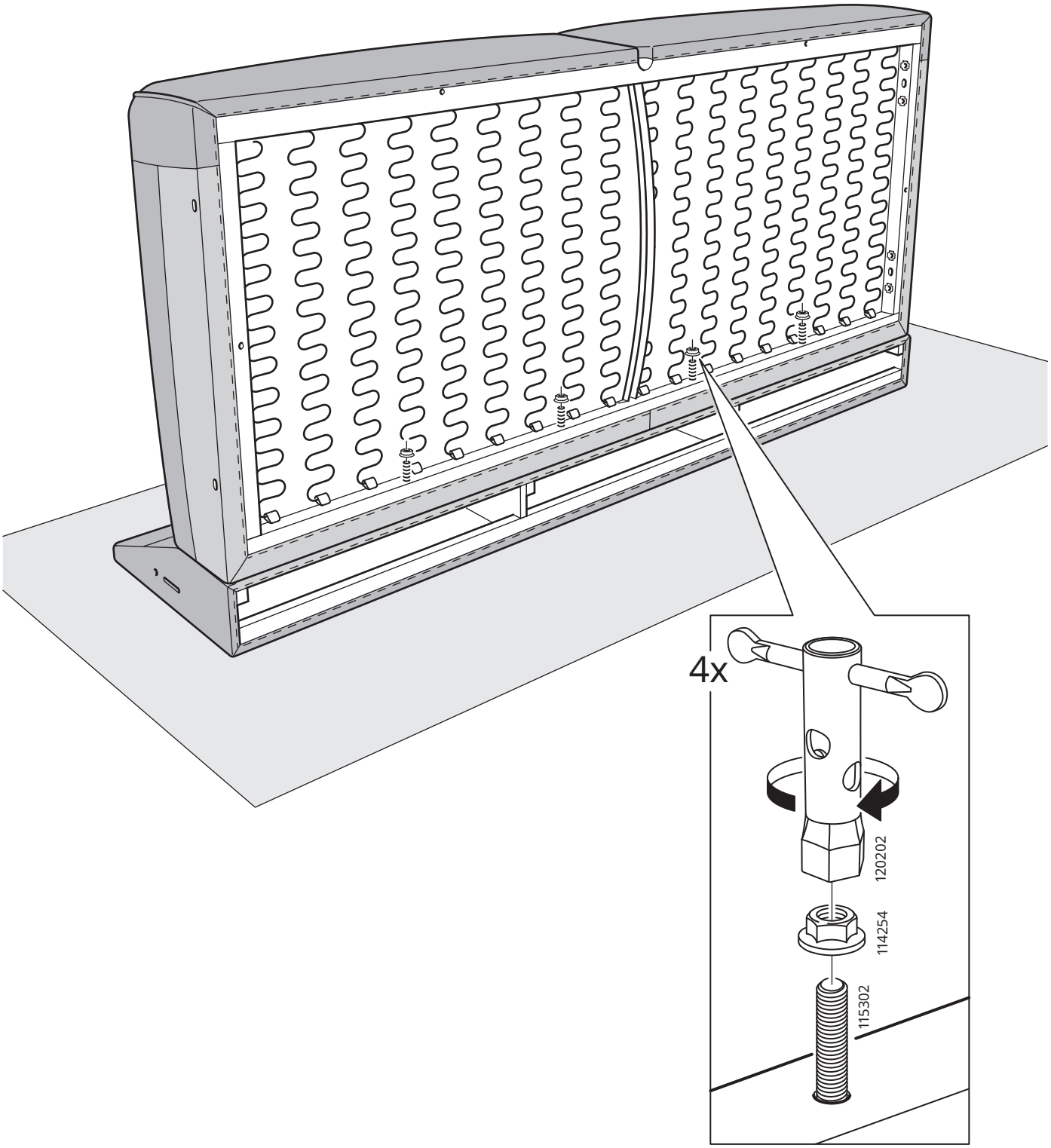

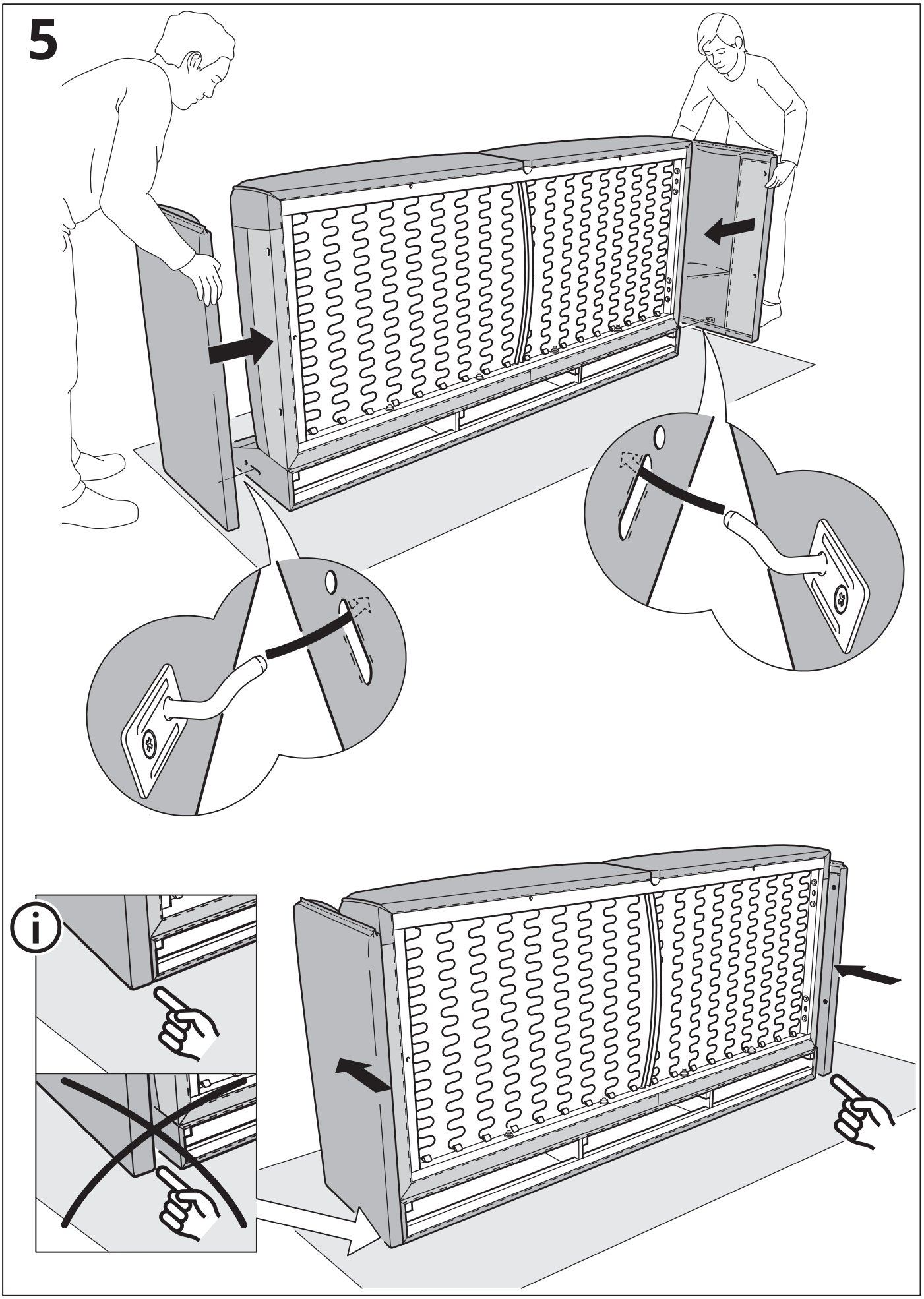
5

6

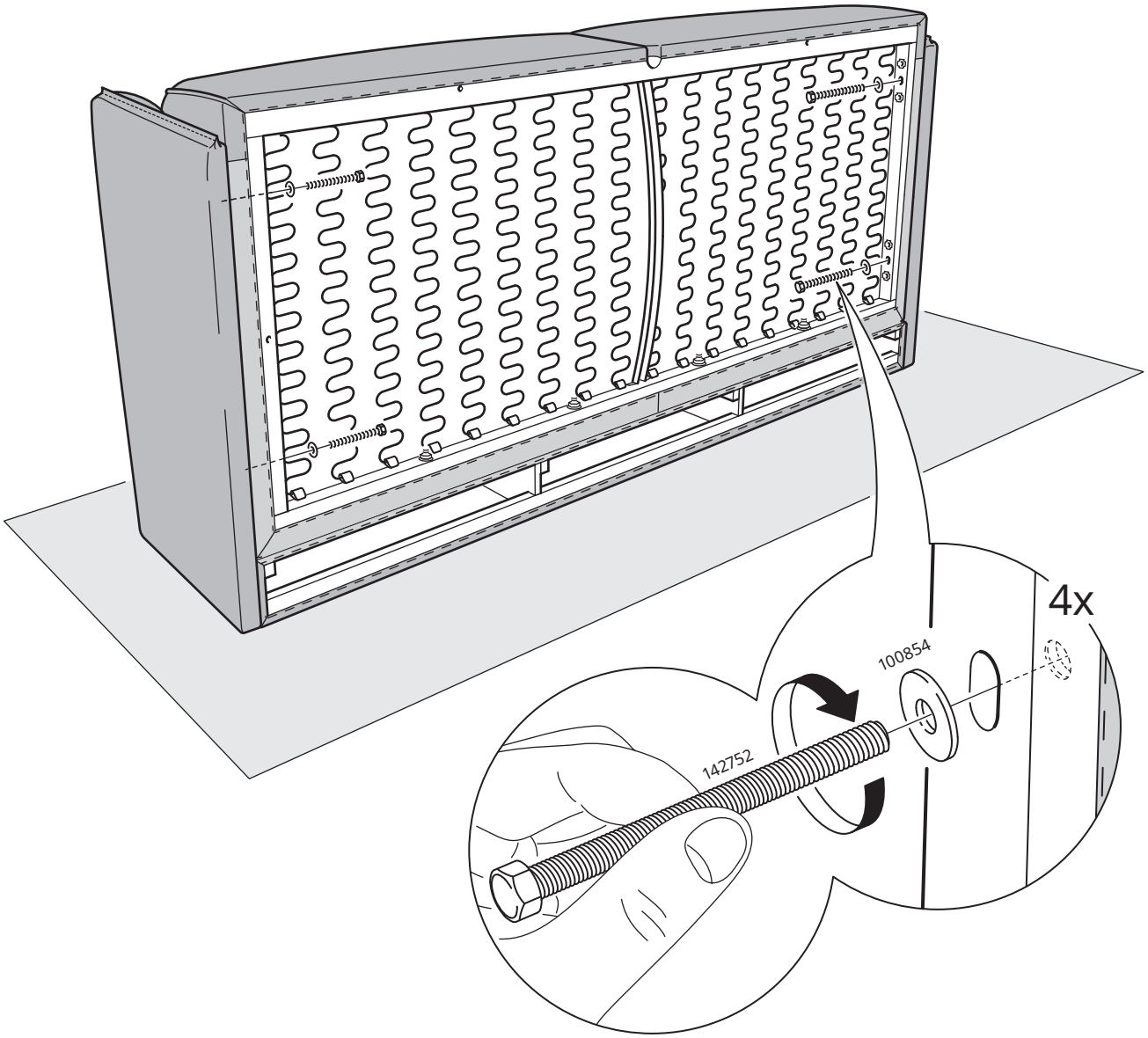

7

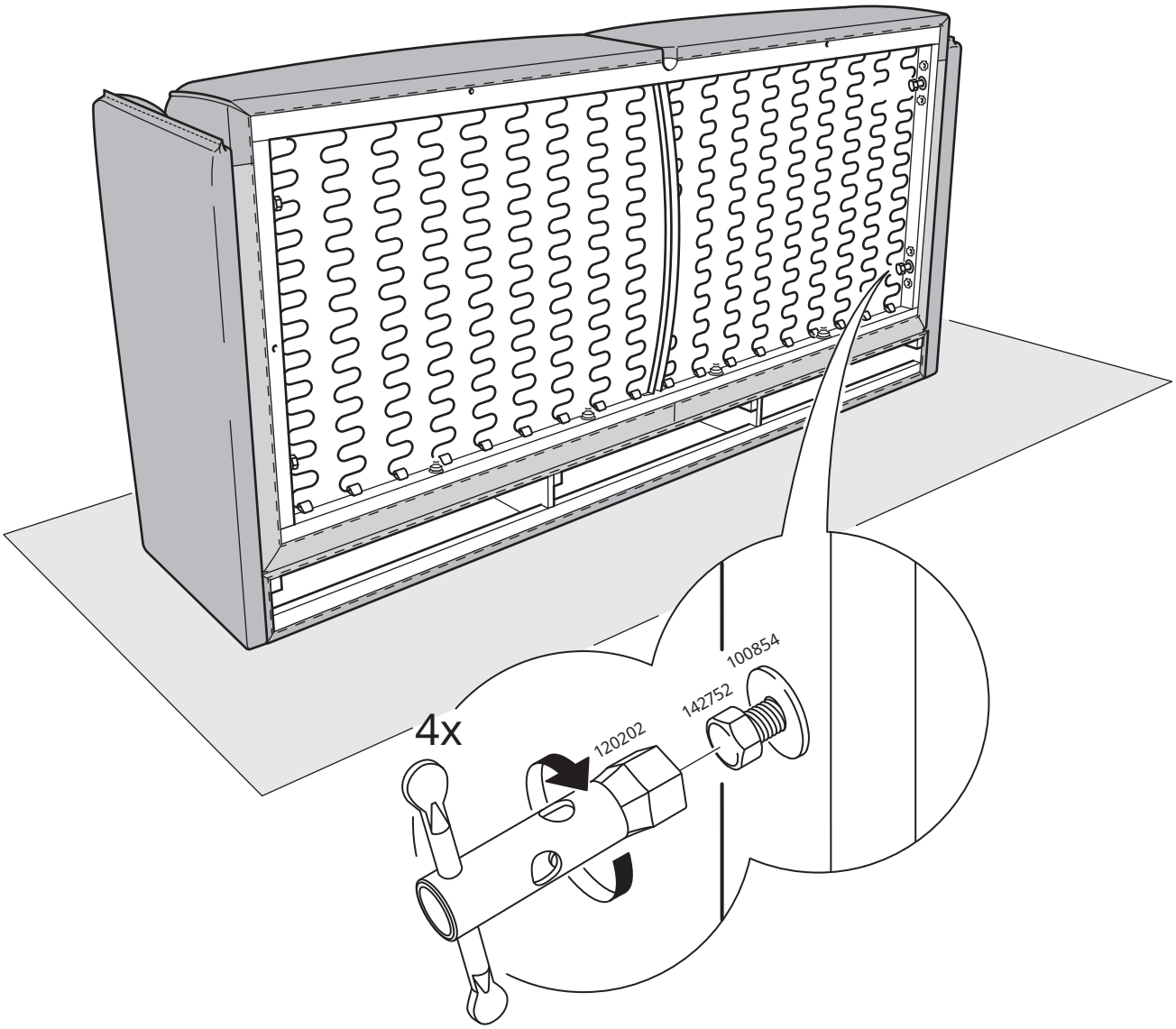

8

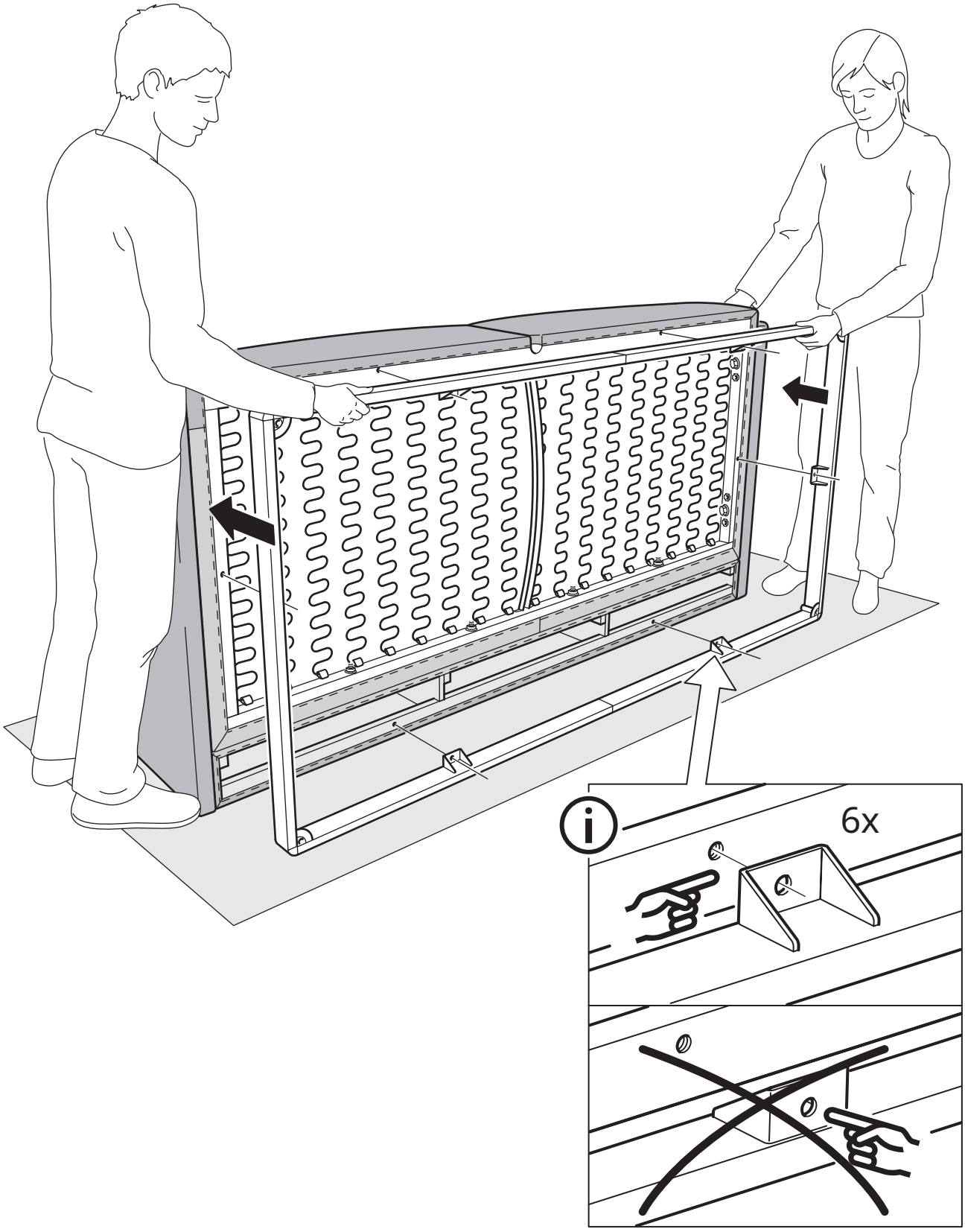

9

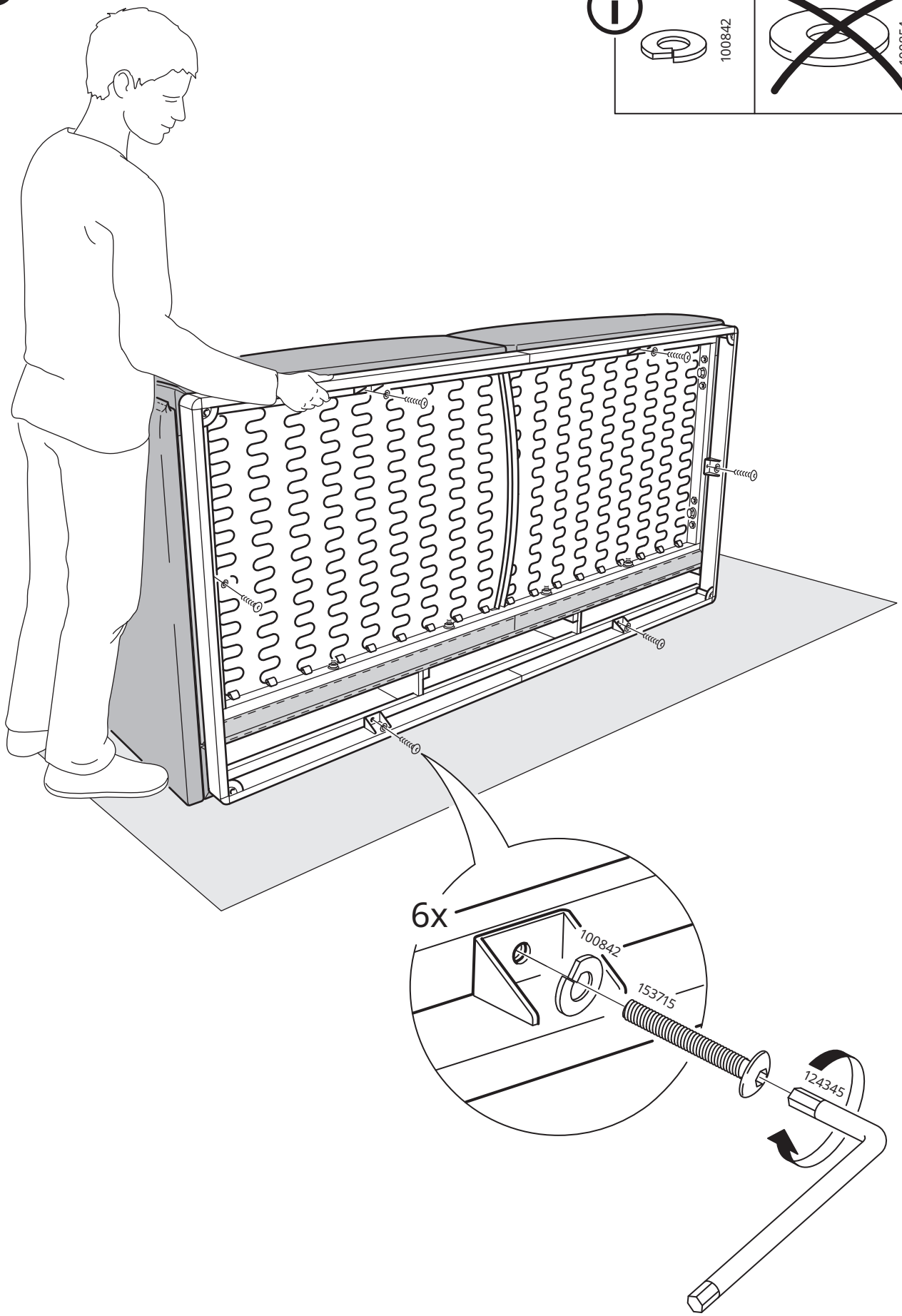

10

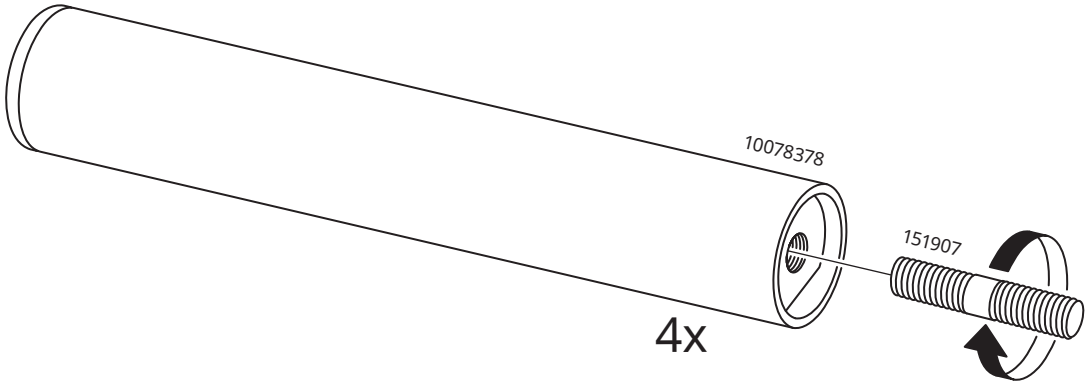

11

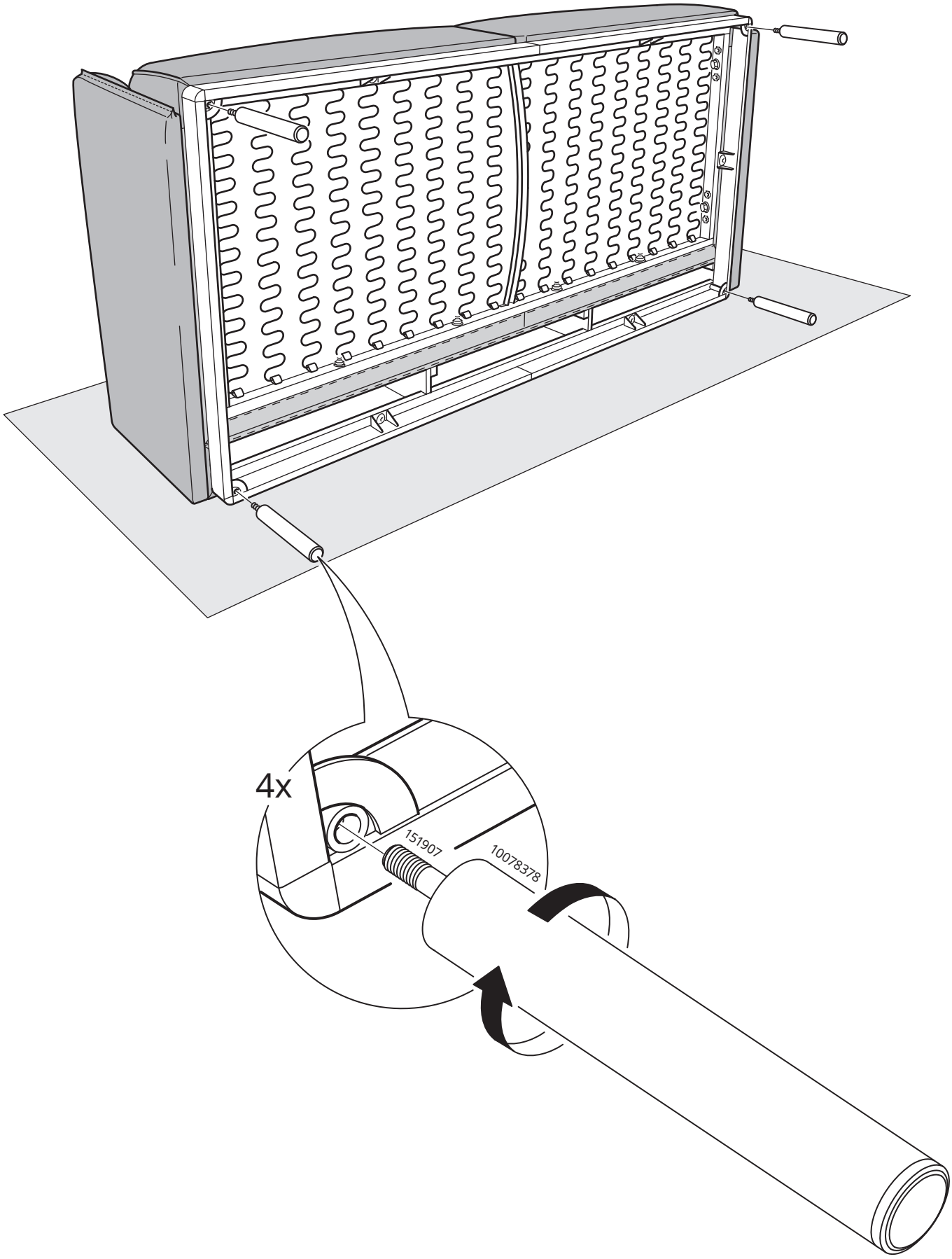

12

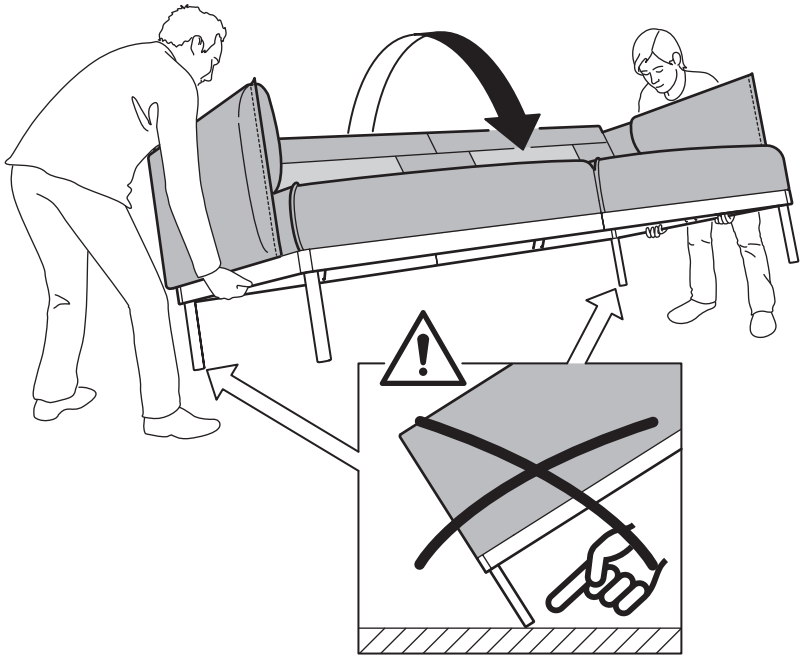

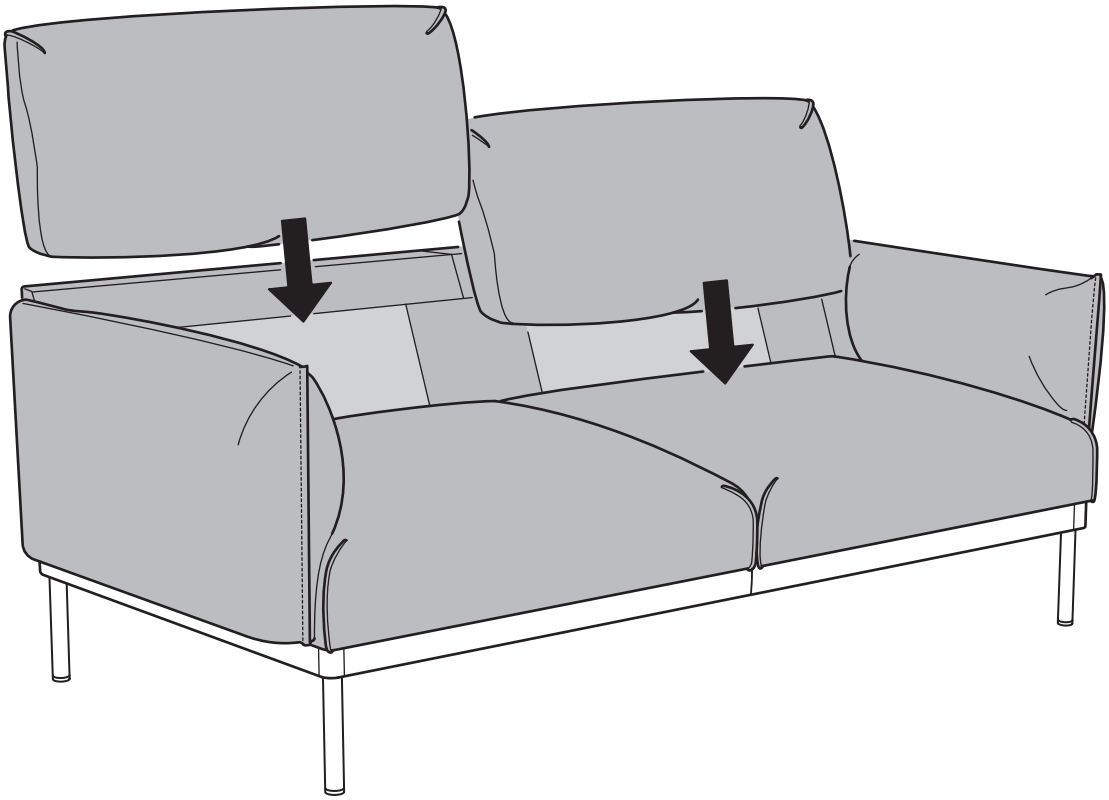

© Inter IKEA Systems B.V. 2020